ARM BED

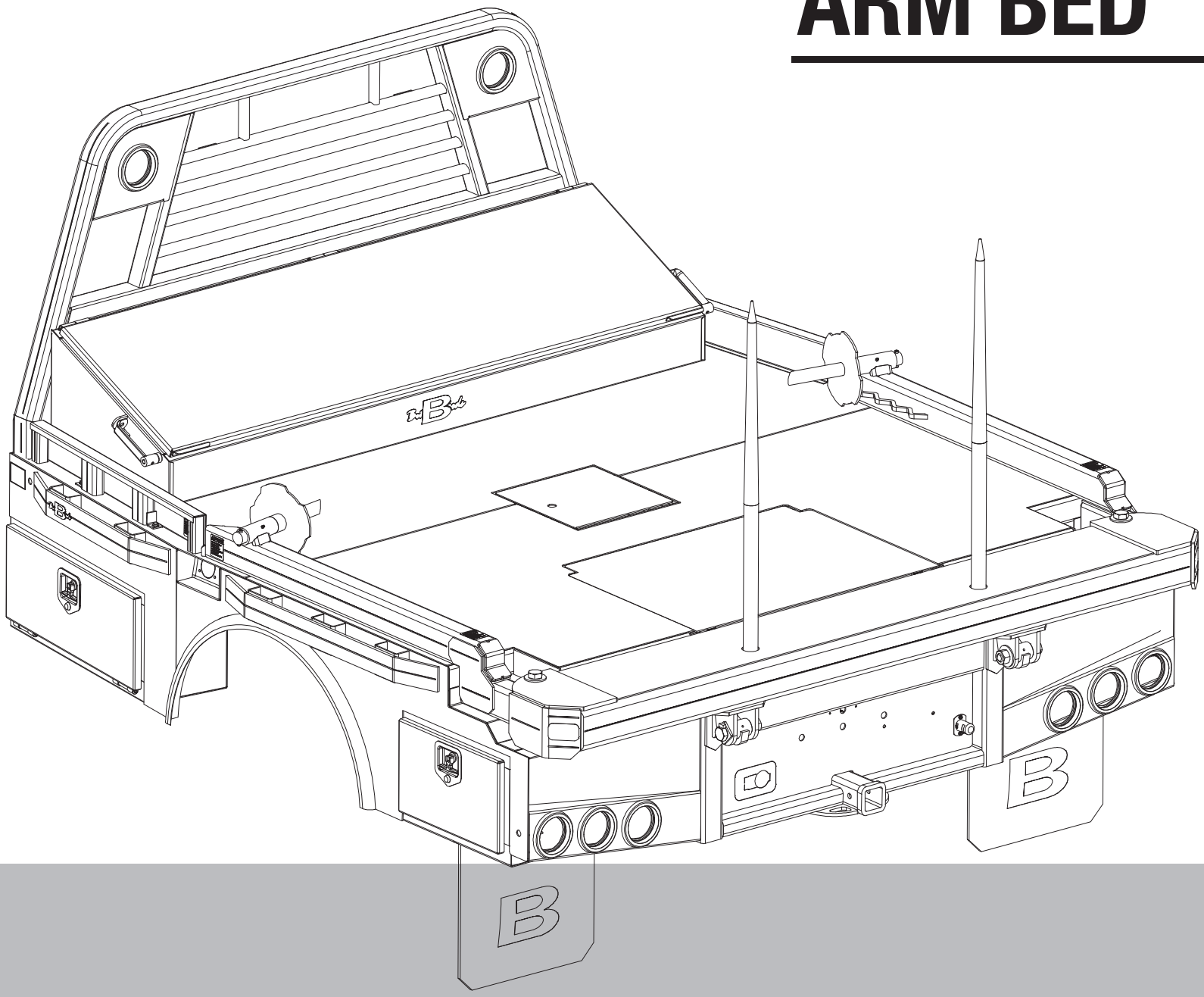

Butler Beds

10-2026

HARPER INDUSTRIES INC

Thank you for purchasing a Butler Arm Bed.

TO THE OWNER OR OPERATOR:

As with all Harper products, the Butler Beds have been thoroughly tested and built to provide a sturdy, dependable product. The Arm Bed is equipped with live hydraulics, which allows it to be used for a wide range of lifting and hauling tasks. This manual is written as an aid to operating and maintaining the Butler Arm Bed. Read and understand the manual thoroughly before operation to avoid damage to the unit or injury to the operator or bystanders.

An Arm Bed can present hazards to an operator who follows unsafe procedures in either the operation or maintenance of the unit. Therefore, **SAFETY WARNINGS** are present at certain locations in the text. Harper Industries is not responsible for accidents or injuries that result from the misuse or lack of maintenance of the Flatbed.

SYMBOL: ⚠ **SAFETY WARNING!** ⚠

MEANING: Failure to understand and obey this warning may result in injury to you or others. Whenever this symbol is used, please pay very close attention to the information presented, and make sure you fully understand. If you do not, contact your dealer or Harper Industries for clarification.

HARPER® INDUSTRIES, INC.
151 E. HWY. 160 Harper, KS 67058
(620) 896-7381 • **Fax** (620) 896-7129
Toll Free 800-596-2464
Email info@butlerbeds.com
Website www.butlerbeds.com

© 2026 Harper Industries, Inc.
The Butler logo are registered trademarks of Harper Industries, Inc. All other brand and product names are trademarks or registered trademarks of their respective companies.

Statement of Warranty 1/11/2025

Harper Industries, Inc. (HII) warrants to each purchaser of a new Butler Bed from an authorized dealer or representative, that such equipment is free of manufacturer's defects in workmanship and materials which appear while in normal service for a period of ONE YEAR commencing with delivery to the original user.

The obligation of HII under this warranty is expressly limited, at our option, to replacement or repair at a service facility designated by Harper Industries or at the manufacturing plant in Harper, KS. A part will be replaced after inspection discloses it to have been defective. This warranty does not apply to defects caused by damage or unreasonable use (including failure to provide reasonable and necessary maintenance, or by performing functions without genuine Butler Bed accessories) while in the possession of the consumer.

Warranty is limited to parts, labor and ground freight delivery of replacement parts. HII shall not be liable for the consequential damages of any kind, including but not limited to consequential labor costs or transportation charges in connection with replacement or repair of defective parts.

This warranty does not apply to parts subjected to misuse, abuse, alteration, improper or inadequate maintenance, or normal wear.

Harper Industries makes no warranty with respect to trade accessories. They are subject to the warranties of their respective manufacturers (including belts, battery, chains, filters).

ANY IMPLIED OR STATUTORY WARRANTIES, INCLUDING ANY WARRANTY OR MERCHANTABILITY OR FITNESS FOR A PARTICULAR PURPOSE, ARE EXPRESSLY LIMITED TO THE DURATION OF THIS WRITTEN WARRANTY. HII makes no other express warranty, nor is anyone authorized to make any on behalf of HII.

For further information please contact your nearest Butler Bed dealer.

RECORDS

Date of Purchase _____ / _____ / _____

Dealer's Name _____

Dealer's Phone _____

Serial Number Bed____ _____

Serial Number Pump__ _____

SCAN & REGISTER

- Scan the QR code with your smart phone
- Register the details of your new Butler Arm Bed
- We'll send you a new hat to welcome you to the Butler family

SCAN FOR YOUR FREE BUTLER HAT!
(Remove sticker after registering)

Table of Contents

OPERATOR SECTION

To the Owner or Operator..... 1
Warranty Statement..... 2
Table of Contents..... 3
Specifications..... 4
Feature Identification..... 5
Safety Guidelines & Operating Instructions..... 6
Maintenance..... 7
Hydraulics, Toolbox, & Power Unit Mounting.... 8
Controls Wiring & Pairing..... 9-10
Spikes in Crosstube..... 11
Troubleshooting & Amp Draw Chart.....12-13

PARTS SECTION

Side Rails, Arms & Crosstubes..... 16
Arm & Crosstube Service Parts..... 17
Bed Service Parts..... 18
Spikes & Spike Holder..... 19
Decals..... 20
Cylinders, Lift & Squeeze..... 21
Hose Charts.....22-23
Lights..... 24
Electrical Harnesses.....25-26
Butler to OEM Chassis Adapter Harnesses..... 27-28
Completing Kit (E/H, Controls & Hardware)..... 29
Controls: Wireless & Corded..... 30
E/H Unit..... 31
E/H Schematic..... 32
Toolboxes..... 33
Mudflaps..... 34
Bed Mounting Kits..... 35
Camera Mounting Brackets..... 35
Bed Lengths for Cake Feeders..... 36

Specifications

Butler Arm Beds are specifically designed to transport and feed round hay bales.

Model Specifications

MODEL	A84X84	A84X101	A84X108	A84X113	A94X101	A94X108	A94X113
WIDTH	7’0”	7’0”	7’0”	7’0”	7’10”	7’10”	7’10”
LENGTH	7’0”	8’5”	9’0”	9’5”	8’5”	9’0”	9’5”

A94X132	A94X137	A96X84	A96X101	A96X108	A96X113	A96X132	A96X137
7’10”	7’10”	8’0”	8’0”	8’0”	8’0”	8’0”	8’0”
11’0”	11’5”	7’0”	8’5”	9’0”	9’5”	11’0”	11’5”

Hydraulic System Specifications

HYDRAULIC SYSTEM	Electric over hydraulic
SYSTEM PRESSURE	2800 psi
FLOW	3.32 gpm @ 500 psi: 1.38 gpm @ 2750 psi
OIL RESERVOIR CAPACITY	10 quarts ATF fluid (Dextron III)
CYLINDER, SQUEEZE	1.125” X 2.5” X 6.0” Rephasing 1.125” X 2.75” X 6.0” Rephasing
CYLINDER, LIFT	1.25” X 3” X 20”
LIFT CAPACITY (centered)	2,500 lbs.

Protective Coating Specifications

PAINT	Heat-cured, polyurethane based paint

Bed Weights

ARM	84x84	84x101	84x108	84x113	94x101	94x108	94x113	94x132	94x137		
WEIGHT	1448	1502	1528	1886	1845	1950	1975	?	2152		
SKIRTED	1687	1962	?	?	?	?	?	?	?		

SPIKE	80x84	84x84	84x102	84x110	84x115	94x102	94x110	94x115	94x134	94x139	
WEIGHT	1283	1350	1400	1500	1544	1184	1614	1622	?	?	
SKIRTED		1199	1467	?	?	1709	?	?	?	?	

FLATBED	80x102	84x84	84x102	84x110	84x115	90x115	94x102	94x110	94x115	94x134	94x139
WEIGHT	1225	1133	1180	?	?	1309	1169	?	1334	?	1497
SKIRTED		1302	1470	?	?		1255	?	?	?	?

Feature Identification

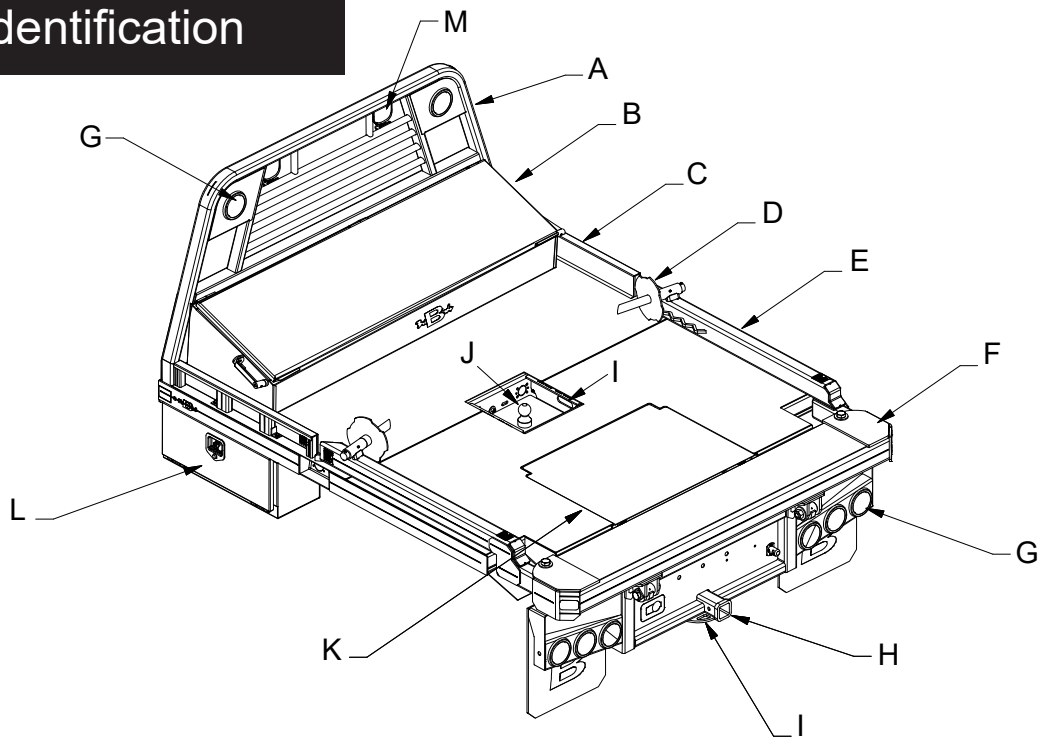

A. Headache Rack – protects the rear pickup window.

B. Across-the-bed Toolbox

C. Side rails or Dummy Arms – serve as side rail along with squeeze arms.

D. Spinners – used to unroll hay.

E. Squeeze Arms – squeeze together to grip the bale and lift it onto the flatbed. When the arms are stored they serve as side rails for the flatbed.

SAFETY WARNING!

Do not stand under the squeeze arms when operating the bale pickup unit, even when arms are empty.

F. Crosstube or Pivot – houses the squeeze cylinder and guides the squeeze arms.

G. Lights – LED lighting for stop-tail-turn. **(Optional lights in headache rack)**

H. Hitch Plate – allows for a 2” square receiver hitch (Class IV) and has holes for hitch pins.

I. Safety Chain Loops – always use safety chains when towing.

J. Gooseneck Hitch – located under a cover plate in the middle of the bed or as a pop up ball.

K. Cylinder Door – Ease of access for replacing and maintaining cylinders.

L. Toolboxes – mount under front of bed on both sides. The Electric/Hydraulic Power unit mounts inside the passenger side toolbox.

M. Work Lights (optional) – lights can be when working at night.

Safety Guidelines

Operator safety is of upmost concern when designing and developing a new piece of equipment. Designers and manufacturers build in as many safety features as possible. However, every year many accidents occur which could have been avoided by a few seconds of thought and a more careful approach to handling equipment. Most accidents can be avoided by observing the precautions in this section. To avoid personal injury, study the safety warnings and cautions listed in this manual and follow them.

General Equipment Safety

- This equipment can be dangerous to children and persons unfamiliar with its operation. The operator should be a responsible adult familiar with farm machinery and trained for this unit.
- Do not attempt to operate equipment under the influence of drugs or alcohol.
- Do not allow persons to operate or assemble this unit until they have read this manual and have developed a thorough understanding of the safety precautions and how the unit works.
- Review the safety warnings and cautions with all users annually.

If you have any questions not answered in this manual or require additional copies, contact your dealer or Harper Industries.

Arm Bed Operation Safety

- Replace any CAUTION, WARNING, DANGER or instruction decal that is not readable or is missing.
- Make sure all safety pins are in place and flatbed mounting bolts are secure to the truck frame.
- Make sure hinges, joints, and sliding parts are well greased, especially during off season to prevent rusting and binding.
- Check with truck dealer for any load limits, additional suspension or tire requirements. The arm bed's lifting capability may exceed the truck's load capacity in some instances.

Hydraulic Safety

SAFETY WARNING!

Hydraulic system operates under highpressure and escaping fluid can penetrate the skin.

Operating Instructions

Loading Instructions

- Back truck up to bale with arms open wide.
- Center spikes (spinners) as close as possible to center of bale.
- Squeeze the bale by pushing the IN button on the controller.
- Lift the bale by pushing the UP button on the controller.
- If you are loading 2 bales, release bale once backed up to the 2nd bale.

CAUTION

DO NOT DROP THE BALE ON THE TRUCK. Damage to the frame and suspension can result from a dropped bale.

- Repeat to load a second bale.
- Maintain pressure on second bale during transport.

CAUTION

When hauling one bale make sure there is down pressure on the bale to keep it from moving. Do not release the arms. Maintain constant steady pressure. When hauling two bales make sure the first bale is as far forward as possible (Fig. 1). Carrying a bale behind the bed (Fig. 2) places excessive stress on the cylinder, linkage, and pins.

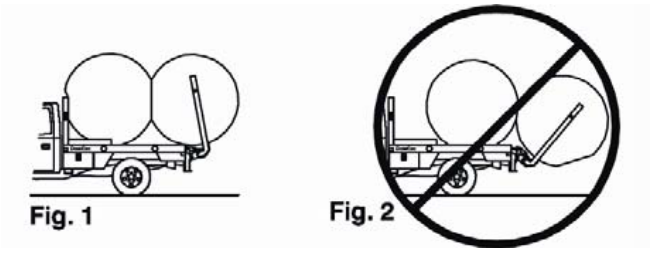

CAUTION

Do not exceed the GVRW of the truck.

Unloading Instructions

- To unload one bale, push the IN button to maintain squeeze pressure. Push the DOWN button to lower the bale. Once bale is on the ground push the OUT button to release pressure.
- When unloading 2 bales, unload first bale as stated above. Raise arms to remaining bale on truck. Squeeze the bale as close to center as possible. To get a center grip on bale you may need to release the bale and squeeze it again near the center of the bale while it is still on the truck bed.

NOTE: When hauling multiple bales short distances, motor will become hot. Allow motor to cool down in between loading cycles. General rule of thumb is 25% motor on, 75% motor off. This equals about 2 ½ minutes "motor on" in a 10 minute period. Opening the tool box lid may help with the cool down.

Unrolling Instructions

- Position the spinner in the center of the bale.
- Lift the bale off the ground and cut the wrap/string off.
- Lower the bale to make contact with the ground.
- Slowly drive forward letting the ground contact to unroll the bale.
- Bump the down switch to maintain ground contact with the bale.

Storing Of Arms

- Raise arms up to bed. Arms must touch bed before bringing arms to down position. Squeeze to stop.

Arm Bed Winter Use

Keep pivot area clear of debris (hay, foreign material, etc…). Check periodically. Clear if necessary. Frozen hay and debris can cause excessive pressure put on metal parts resulting in operational issues.

Maintenance

Check Daily or Before Use

- Check the hydraulic oil level. Keep the level to "FULL" on the dipstick.
- Examine the hydraulic hoses for leaks with an object such as cardboard.

SAFETY WARNING!

Hydraulic fluid escaping under pressure can penetrate the skin and may cause death if not treated immediately.

Lubrication

- Grease all (6) zerks once a week or more often during heavy use to keep arm bed operating at its best.
- Grease arms, spinners, and pivots as shown in the picture below.

SAFETY WARNING!

Use extreme caution when greasing the flatbed. Completely lower arms to expose rear zerks and turn off ignition.

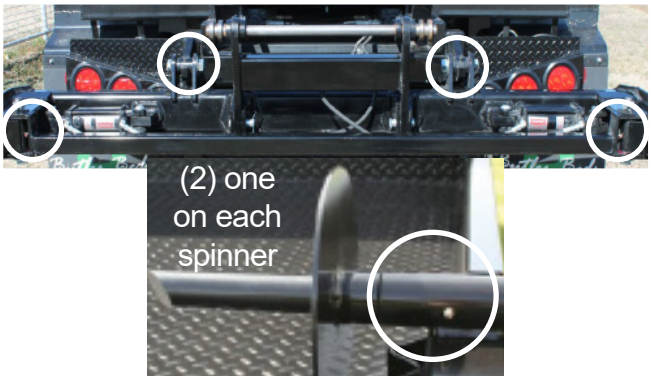

Hydraulics

Hydraulic System

- If the quick-couplers leak, the o-rings may need to be replaced.
- Heat 190° or greater, can be damaging to the hydraulic system. Check for “hot spots” which may indicate a problem.
- Run the bed at least twice a month to prevent valve condensation.

Hydraulic Hose Connections

- 1/4” Hoses (squeeze) attach to top valve body. Taped hose screws into C1.
- 3/8” Hoses (lift) attach to bottom valve body. Taped hose screws into C1.
- After filling with ATF, synchronize arms (Arm Bed) and remove air from lines (Arm & Spike Bed).See Trouble Shooting.

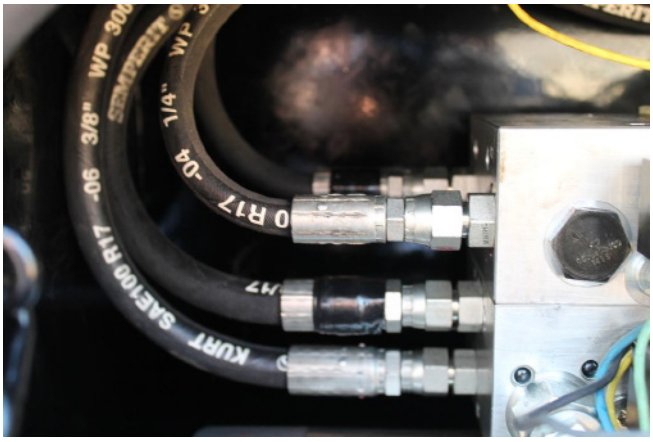

Toolbox Mounting

- Mount the box with the two bolt holes on the short end towards the front. Bolt the top of box to the welded bracket under the bed. All bolts are 3/8”.

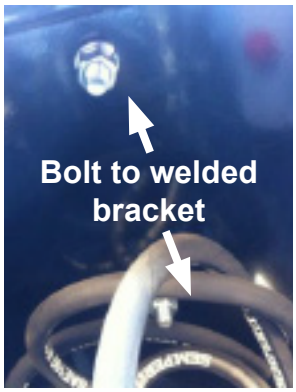

Mounting of Power Unit

Place power unit in passenger side box with the reservoir facing the cab of the truck. Position the holes in bottom of pump block over holes in bottom of box. Using 3/8” bolts, secure the pump to the box. Run the hydraulic hoses through the rubber grommet in the box. The power unit operates best with a two battery set up. If needed, the second battery can be mounted next to the power unit in the tool box.

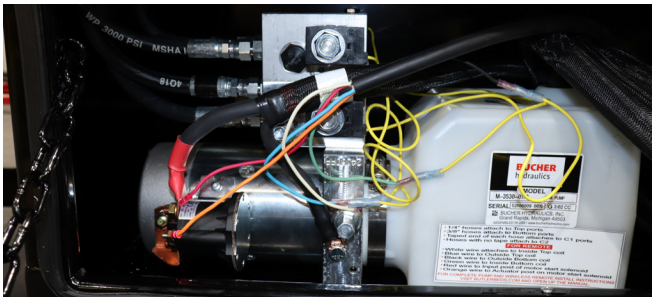

Power Unit Identification

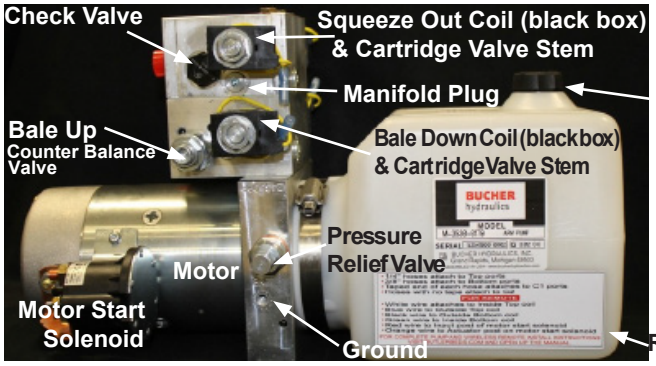

Vent Cap

Reservoir

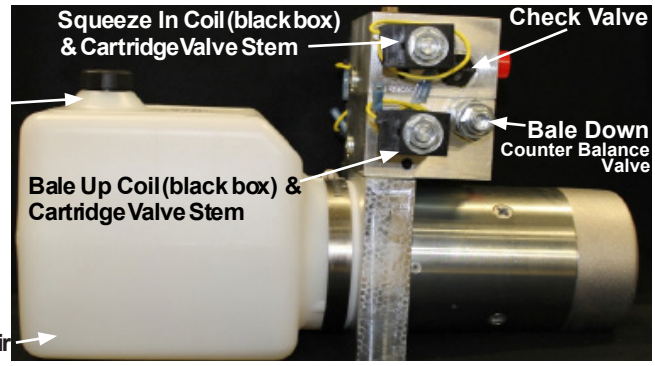

BUTLER ARM CORDED & WIRELESS: BUCHER VALVE

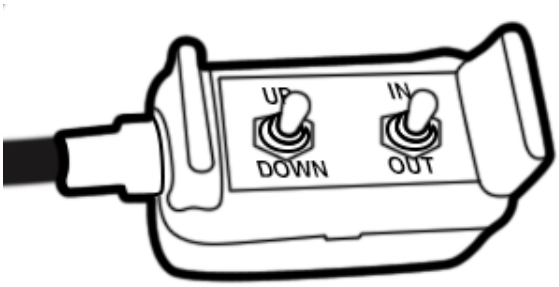

Parts List			
ITEM	QTY	PART #	DESCRIPTION
1	1	232150	Wired, Hand Control Two Switch
2	2	232171	Switch, AB Hand Control

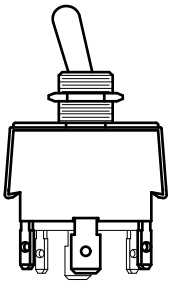

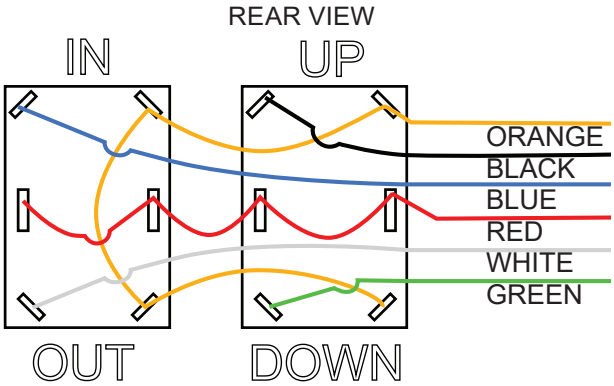

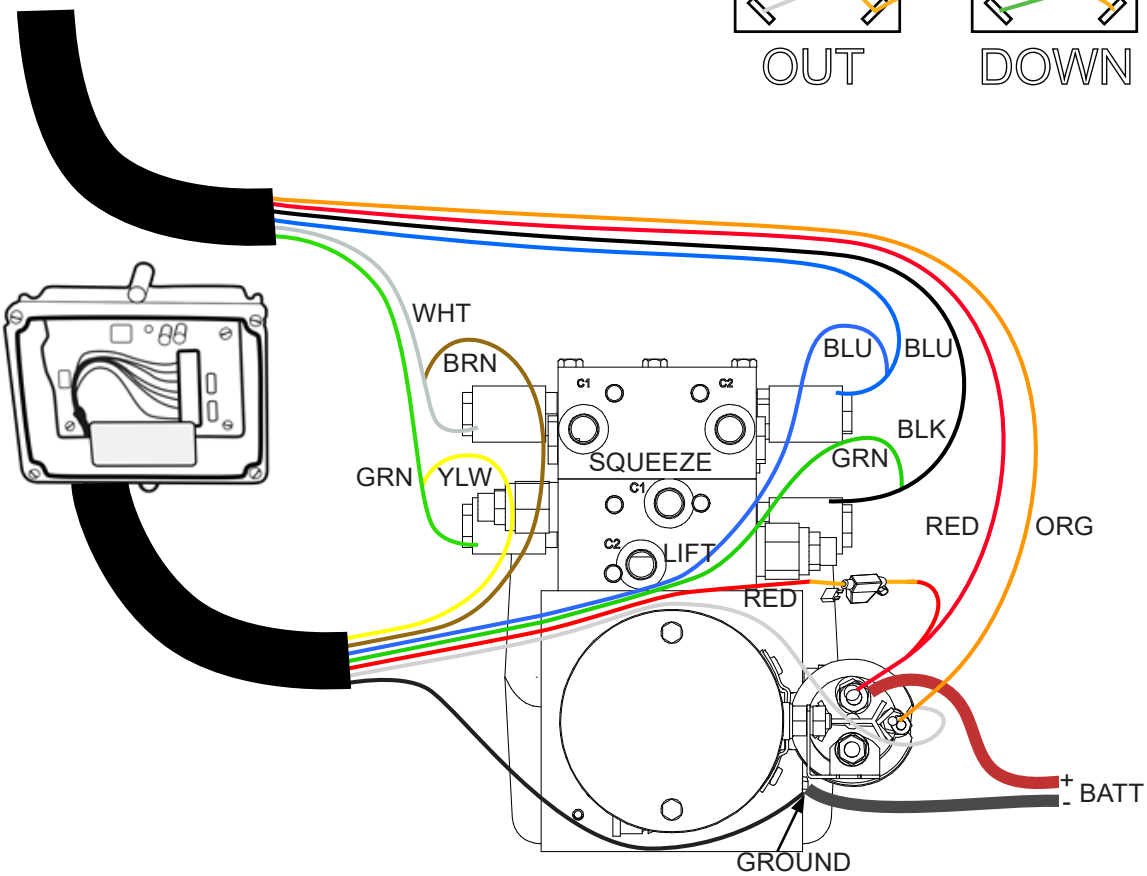

LODAR: BUTLER ARM BED

*Receiver NOT SOLD separately. Must buy kit.
Transmitter can be purchased individually.

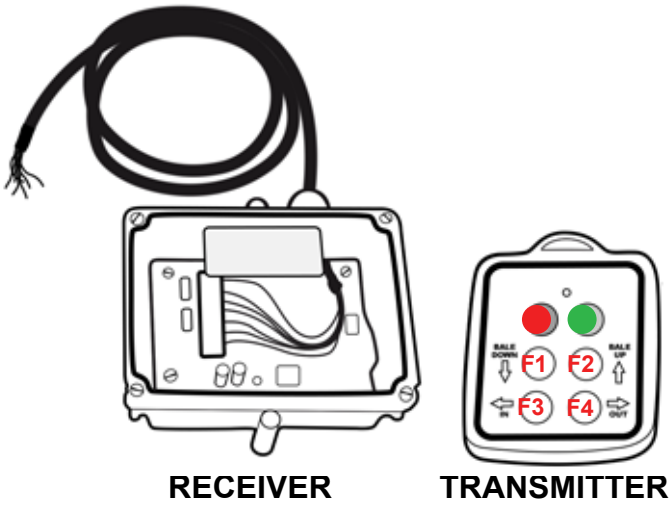

RECEIVER **TRANSMITTER**

Pairing (Synching) the Wireless System

1. NO POWER - **receiver**
2. PRESS RED & GREEN *transmitter* buttons until its LED turns off. Release the buttons (it will blink "search" afterwards)
3. POWER - **receiver**
4. HOLD *transmitter* GREEN button until the **receiver** GREEN LED is solid. Release button.
5. Hold the RED button to turn the *transmitter* off. When you turn the *transmitter* back on, it will be synched.

ITEM	QTY	PART #	DESCRIPTION
1	1	233008	*RECEIVER/TRANSMITTER
2	1	232166	Transmitter
3	1	233016	Receiver/Transmitter Assy (new installs)

System Fuses

Fuse & Fuse Holder
The 250 amp (Arm Bed) or the 200 amp (Spike Bed) fuse and holder attach to the battery's positive post.

Attach postive cable here

Part numbers on pg. 29

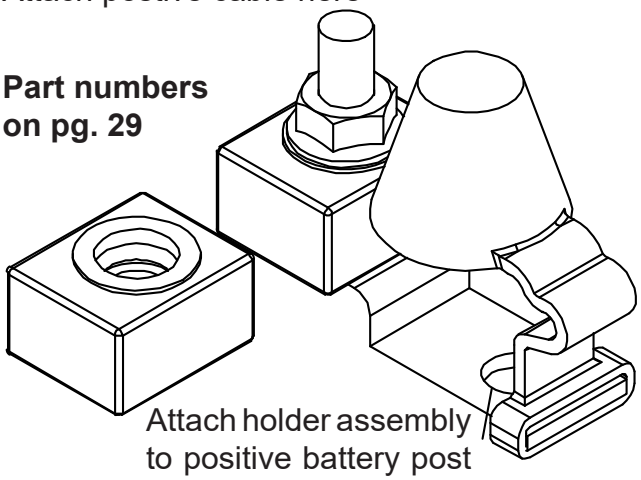

Attach holder assembly to positive battery post

Older Butler Beds may have fuses as shown below. They can be sourced outside the company or upgraded to our "ice cube" style.

Spikes in Crosstube

It is important when using the Arm Bed with Spikes in the crosstube, that the Spikes be parallel with the ground when spiking a bale. Failure to do so can result in structural damage to the bed. Refer to pictures to show correct & incorrect spike positions.

Note: Harper Industries, Inc. warrants each purchaser of a new Butler Bed from an authorized dealer or representative, that such equipment is free of manufacturer's defects in workmanship and materials which appear while in normal service for a period of ONE YEAR commencing with delivery to the original user. Structural damage due from incorrect spike position will NOT be warrantied by Harper Industries.

RESULT OF INCORRECT SPIKE POSITION

CORRECT SPIKE POSITION

CORRECT SPIKE POSITION

INCORRECT SPIKE POSITION

INCORRECT SPIKE POSITION

Troubleshooting

The most common problems with a power unit are due to low voltage from a battery, fuse failure, faulty wire or a failing ground connection. To narrow down the problem, connect jumper cables to the pump (positive to input side of solenoid & negative to the ground on pump base). Use a separate good battery (from another vehicle or a new battery). If the pump and bed operate properly, then have the battery tested, check in line fuse and power cord, and/or run ground cable directly to the battery instead of inside the tool box or frame. If the pump does not operate properly with jumper cables, then check solenoid and/or motor.

PROBLEM	SOLUTION
Power unit not responding to remote when toggle is activated	Use test light on remote connections to solenoid. If any connections are not working, the problem is in the remote. If all connections are working, check solenoid. If solenoid is working properly, the problem is in the pump motor.
Motor is humming or bed is operating slowly	Pump motor is failing.
One of the four operations is not working. Example: bed will lift, lower and squeeze in but will not squeeze out	Check wire on cartridge valve coil for a short or take coil off and activate remote while putting a screwdriver inside coil. If screwdriver does not magnetize to coil, the coil is failing. If coil is magnetizing, then failure is in cartridge valve.
Arm Bed arms are not moving in unison (synchronized) (The most common problem after hoses are replaced.)	1. Squeeze arms together above the welded stops. Assist the arms by hand if needed until they are both at maximum squeeze point. Hold toggle active for 20 seconds in order to clear air from lines. 2. Check rubber bumpers that are on each arm on the opposite side of cylinder hook up point.
Bale drops on its own when suspended in the air or will not maintain a tight squeeze	Turn the counterbalance valve ¼ turn clockwise until bale suspends normally. Do not tighten screw all the way in.
Arms pivot are not moving fast / pressurizing but not moving	Check for debris in the check valve. Make sure spring plunger is not broken.
Bale drops and adjusting the counterbalance valves have no effect	Counterbalance valve may be over-torqued. Loosen the whole valve (as if replacing it) and retorque 210 to 240 in-lbs

PROBLEM	SOLUTION
Bed will not lift heavier bales/ arms will not release bale when suspended in air	Turn the counter-balance valve ¼ turns clockwise until bale lifts properly. Do not tighten screw all the way in. If problem persists, turn pressure relief set screw in ¼ turn clockwise until bale lifts properly. Do not tighten screw all the way in. If problem still persists then power unit is failing.
Bale shutters or falls too fast	Turn the counterbalance valve ¼ turn clockwise until bale goes down properly. Do not tighten screw all the way in.
Bale goes down too fast	Turn counterbalance valve ¼ turn counter clockwise until desired speed is achieved. If bale starts to shutter/go down too fast, turn same screw clockwise ¼ turn.
Fluid leaking under bed or in tool box	Check hose connection at leak. Tighten or replace if needed. Leaks in tool box are best diagnosed by activating the remote while watching the power unit. Determine where the leak is coming from and replace O-ring / plug / valve if needed. Some leaks are fixed by tightening the plug/valve. Make sure the plastic reservoir is not cracked.

How to Check

Solenoid	Check the two posts. If posts show voltage, then the solenoid is good.
Pump	Make sure there is good voltage to the motor. If motor checks out good check for broken or worn gear. If there is a grinding or metallic noise, the pump needs to be replaced.
Motor	Check amp range using chart below. Arm & spike beds draw different amps at different pressures.

Bucher Motor Specs.		
PSI	**AMP DRAW**	**GPM**
50	96	4.59
250	114	3.94
500	137	3.32
750	159	2.86
1000	180	2.52
1250	201	2.25
1500	221	2.03
1750	241	1.86
2000	260	1.71
2250	279	1.59
2500	297	1.48
2750	315	1.38
3000	332	1.28

NOTE: The power unit is configured to lift heavier bales. Speed for lighter bales is adjusted by the counterbalance valve. Turn the counterbalance valve set screw counter clockwise until bale will not lift, and then turn the same screw clockwise by ¼ turns until bale will lift properly multiple times.

Butler Beds

ARM BED

PARTS

Table of Contents

PARTS SECTION

Side Rails, Arms & Crosstubes..... 16
Arm & Crosstube Service Parts..... 17
Bed Service Parts..... 18
Spikes & Spike Holder..... 19
Decals..... 20
Cylinders, Lift & Squeeze..... 21
Hose Charts.....22-23
Lights..... 24
Electrical Harnesses.....25-26
Butler to OEM Chassis Adapter Harnesses..... 27-28
Completing Kit (E/H, Controls & Hardware)..... 29
Controls: Wireless & Corded..... 30
E/H Unit..... 31
E/H Schematic..... 32
Toolboxes..... 33
Mudflaps..... 34
Bed Mounting Kits..... 35
Camera Mounting Brackets..... 35
Bed Lengths for Cake Feeders..... 36

SIDE RAILS, ARMS & CROSSTUBES

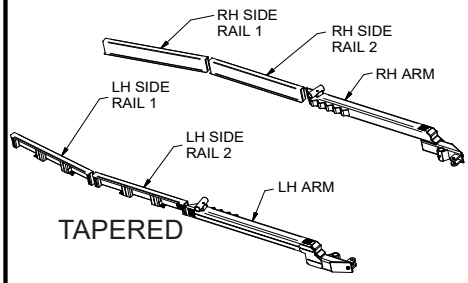

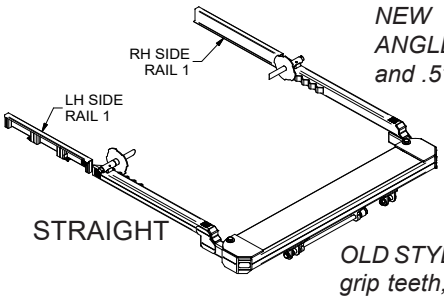

NEW ARMS have ANGLED spinner tubes and .5" grip teeth.

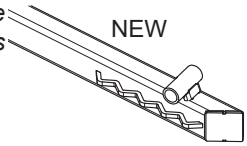

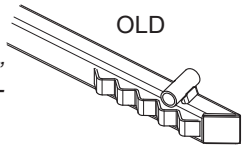

OLD STYLE ARMS have 2" grip teeth, and STRAIGHT spinner tubes.

SIDE RAILS						
BED SIZE	BED SHAPE	LH RAIL 1	RH RAIL 1	LH RAIL 2	RH RAIL 2	Length X
A84X84	Straight	205232	205231	N/A	N/A	Normal 50"
A84X84	Straight	205238	205237	N/A	N/A	Short 41"
A84X101	Straight	205195	205194	N/A	N/A	Normal 50"
A84X101	Straight	205195	205194	N/A	N/A	41CF 48"
A84X108	Straight	205226	205227	N/A	N/A	Normal 50"
A84X113	Straight	205224	205224	N/A	N/A	Normal 50"
A90X108	Tapered	205195	205194	205254	205254	Normal 50"
A90X108	Straight	205226	205227	N/A	N/A	Normal 50"
A90X113	Tapered	205195	205194	205211	205241	Normal 50"
A90X113	Straight	205224	205225	N/A	N/A	Normal 50"
A90X137	Tapered	205195	205194	205195	205194	Normal 50"
A90X137	Straight	205342	205343	N/A	N/A	Normal 50"
A94X84	Straight	205232	205231	N/A	N/A	Normal 50"
A94X84	Straight	205238	205237	N/A	N/A	Short 41"
A94X101	Tapered	205195	205194	N/A	N/A	Normal 50"
A94X101	Tapered	205195	205194	N/A	N/A	41CF 48"
A94X101	Straight	205195	205194	N/A	N/A	Normal 50"
A94X108	Tapered	205195	205194	205254	205254	Normal 50"
A94X108	Straight	205226	205227	N/A	N/A	Normal 50"
A94X113	Tapered	205195	205194	205211	205241	Normal 50"
A94X113	Straight	205224	205225	N/A	N/A	Normal 50"
A94X132	Tapered	205195	205194	205259	205260	Normal 50"
A94X132	Straight	205347	205348	N/A	N/A	Normal 50"
A94X137	Tapered	205195	205194	205195	205194	Normal 50"
A94X137	Straight	205342	205343	N/A	N/A	Normal 50"
A96X84	Tapered	205232	205231	N/A	N/A	Normal 50"
A96X84	Tapered	205232	205231	205270	205270	Short 41"
A96X84	Straight	205232	205231	N/A	N/A	Normal 50"
A96X101	Tapered	205195	205194	N/A	N/A	Normal 50"
A96X101	Tapered	205195	205194	N/A	N/A	41CF 48"
A96X101	Straight	205195	205194	N/A	N/A	Normal 50"
A96X108	Tapered	205195	205194	205254	205254	Normal 50"
A96X108	Straight	205226	205227	N/A	N/A	Normal 50"
A96X113	Tapered	205195	205194	205211	205241	Normal 50"
A96X113	Straight	205224	205225	N/A	N/A	Normal 50"
A96X132	Tapered	205195	205194	205259	205260	Normal 50"
A96X132	Straight	205347	205348	N/A	N/A	Normal 50"
A96X137	Tapered	205195	205194	205195	205194	Normal 50"
A96X137	Straight	205342	205343	N/A	N/A	Normal 50"

OLD STYLE ARMS			
BED SIZE	LH ARM	RH ARM	Length X
A84X84	205193	205192	Normal 50"
A84X84	205235	205234	Short 41"
A84X101	205193	205192	Normal 50"
A84X101	205333	205334	41CF 48"
A84X108	205193	205192	Normal 50"
A84X113	205193	205192	Normal 50"
A90X108	205228	205221	Normal 50"
A90X113	205228	205221	Normal 50"
A90X137	205228	205221	Normal 50"
A94X101	205228	205221	Normal 50"
A94X101	205339	205340	41CF 48"
A94X108	205228	205221	Normal 50"
A94X113	205228	205221	Normal 50"
A94X132	205228	205221	Normal 50"
A94X137	205228	205221	Normal 50"
A96X84	205228	205221	Normal 50"
A96X84	205267	205268	Short 41"
A96X101	205228	205221	Normal 50"
A96X101	205339	205340	41CF 48"
A96X108	205228	205221	Normal 50"
A96X113	205228	205221	Normal 50"
A96X132	205228	205221	Normal 50"
A96X137	205228	205221	Normal 50"

CROSSTUBE	
BED SIZE	PART #
A84X84	205196
II	II
A84X101	205196
II	II
A84X108	205196
A84X113	205196
A90X108	205197
A90X113	205197
A90X137	205197
A94X101	205198
II	II
A94X108	205198
A94X113	205198
A94X132	205198
A94X137	205198
A96X84	205198
II	II
A96X101	205198
II	II
A96X108	205198
A96X113	205198
A96X132	205198
A96X137	205198

CROSSTUBE 2/SPIKES	
BED SIZE	PART #
A84X84	205322
II	II
A84X101	205322
II	II
A84X108	205322
A84X113	205322
A90X108	205323
A90X113	205323
A90X137	205323
A94X101	205324
II	II
A94X108	205324
A94X113	205324
A94X132	205324
A94X137	205324
A96X84	205324
II	II
A96X101	205324
II	II
A96X108	205324
A96X113	205324
A96X132	205324
A96X137	205324

NEW STYLE ARMS			
BED SIZE	LH ARM	RH ARM	Length X
A84X84	205450	205449	48"
A84X84	205475	205476	41"
A84X101	205450	205449	48"
A84X108	205450	205449	48"
A84X113	205450	205449	48"
A90X108	205450	205449	48"
A90X113	205450	205449	48"
A90X137	205450	205449	48"
A94X84	205450	205449	48"
A94X84	205475	205476	41"
A94X101	205450	205449	48"
A94X108	205450	205449	48"
A94X113	205450	205449	48"
A94X132	205450	205449	48"
A94X137	205450	205449	48"
A96X84	205475	205476	41"

CROSSTUBE	
BED SIZE	PART #
A84X84	205196
II	II
A84X101	205196
A84X108	205196
A84X113	205196
A90X108	205197
A90X113	205197
A90X137	205197
A94X84	205198
II	II
A94X101	205198
A94X108	205198
A94X113	205198
A94X132	205198
A94X137	205198
A96X84	205198

CROSSTUBE 2/SPIKES	
BED SIZE	PART #
A84X84	205322
II	II
A84X101	205322
A84X108	205322
A84X113	205322
A90X108	205323
A90X113	205323
A90X137	205323
A94X84	205324
II	II
A94X101	205324
A94X108	205324
A94X113	205324
A94X132	205324
A94X137	205324
A96X84	205324

ARM & CROSSTUBE SERVICE PARTS

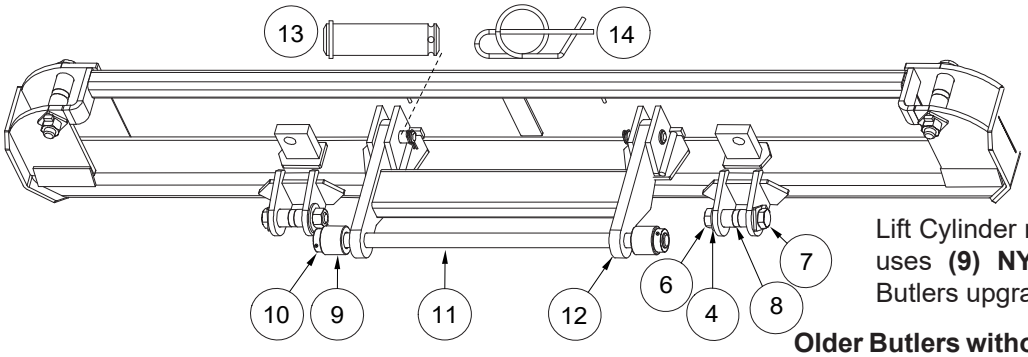

Lift Cylinder rod end connection point now uses **(9) NYLATRON ROLLER.** Older Butlers upgrade to these rollers**.**

Older Butlers without AB ROLLER SHAFT (11): Customers must source 1-1/4" shaft, cut to fit, & National RA104 bearings.

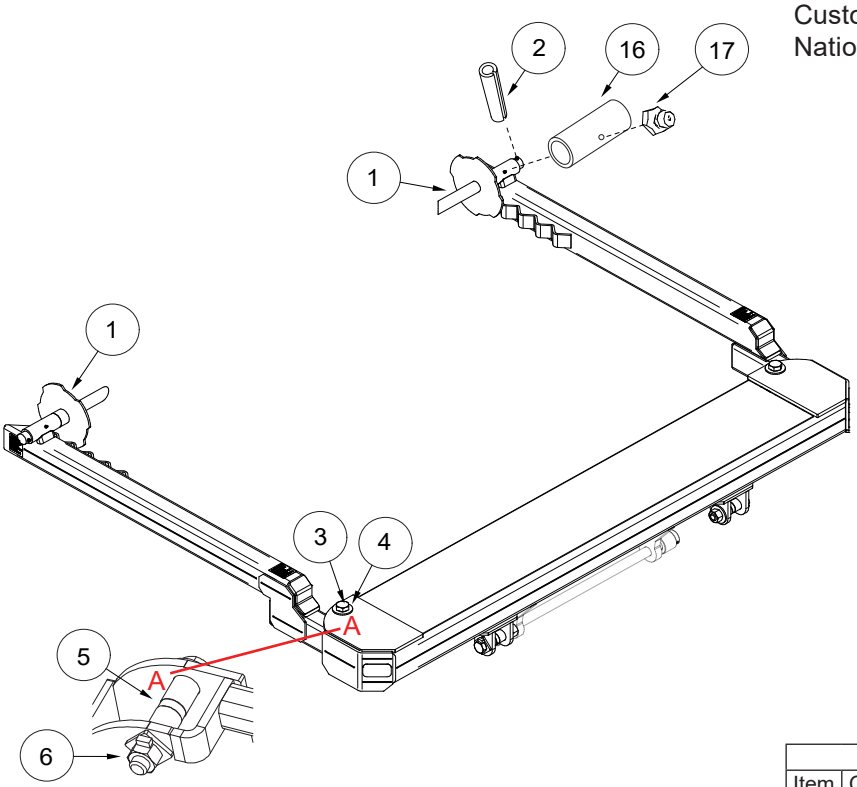

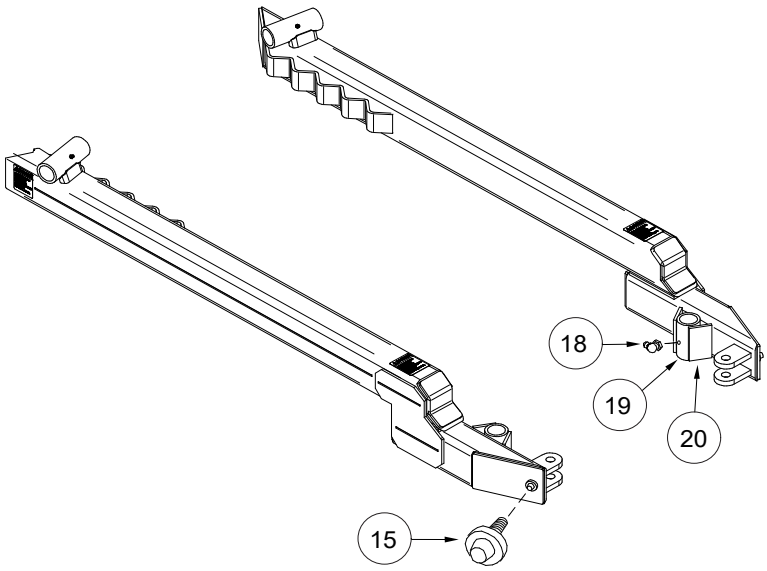

Parts List			
Item	Qty	Part #	Description
1	2	285026	Spinners
2	2	112121	Roll Pin, 3/8 X 2
3	2	110364	Bolt, 1-8 X 7 Gr5 Zinc
4	4	110038	Washer, 1 Flat Zinc
5	2	280017	Pin Tube, Arm
6	4	110601	Nut, 1-8 Gr5 Zinc
7	2	110208	Bolt, 1-8 X 5 Hhcs Gr 5 Zinc
8	2	280018	Pin Tube, Cross Frame
9	2	280170	Roller, 2.5 X 1.25 X 2 Nylatron
10	2	112122	Collar, Lock Id 1.25 3/8-16 Set Screw
11	1	280160	Shaft, Ab Roller
12	1	285017	Weldment, H-Frame
13	1	220480	Pin, 1 X 3.5
14	1	102122	Locking Cotter Ring 1"
15	1	112124	Bumper, Arm
16	2	280014	Tube, Spinner
17	2	510174	Grease Zerk, 1/4-28, Std
18	2	500230	Grease Zerk, 1/4-28 90°
19	2	280013	Pivot Tube, Squeeze Arm
20	4	281368	Mounting Plate (Welded)

BED SERVICE PARTS

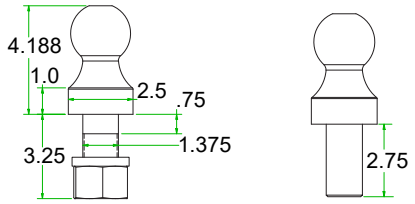

Part #	Ball Hitch
212032	2.3125” Ball, 1.375 x **3.25”** Bolt, 1.00” Rise
281080	2.3125” Ball 1.375 x **2.75”** Bolt, 1.00” Rise

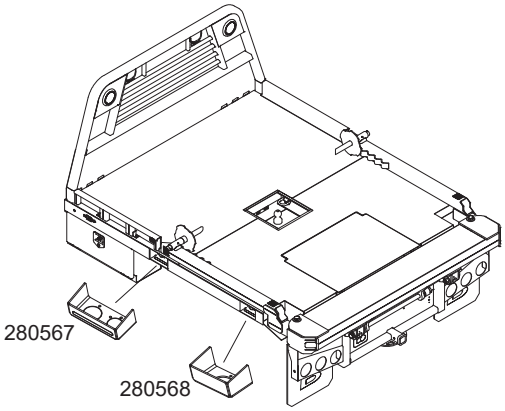

Part #	Fuel Fill Brackets
280567	Bracket, Fuel and DEF Fill (Not Painted)
280568	Bracket, Fuel Fill, C&C Rear (Not Painted)

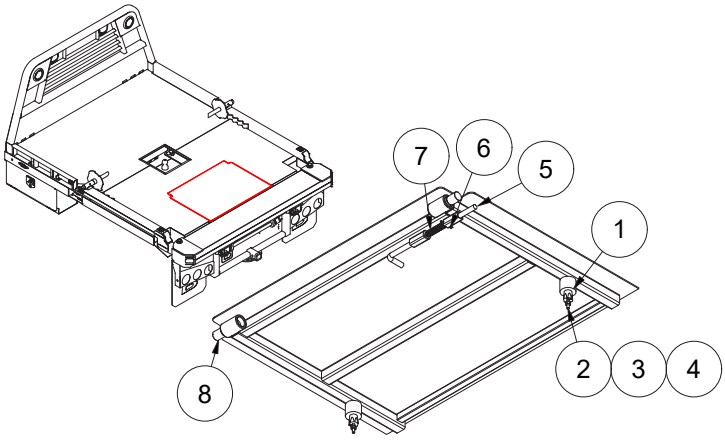

Cylinder Door Kit **285253** (pins not welded)			
ITEM	QTY	PART #	DESCRIPTION
1	2	112117	Door Holder, Rubber and Plastic
2	2	110406	Bolt, 1/4-20 X 2.25
3	2	110667	Washer, 1/4 Lock
4	2	110609	Nut, 1/4-20
5	1	280130	Rod, Service Door
6	1	110279	Roll Pin, 3/16 X 1 1/2
7	1	112114	Spring, Compression 5/8 X 2.75
8	2	280155	Pin , Door

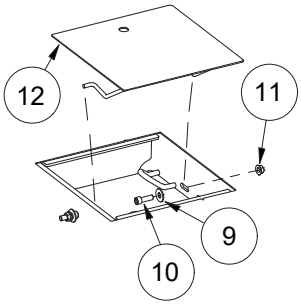

New Gooseneck Well Door Kit **205483** (Late 2022 forward)			
ITEM	QTY	PART #	DESCRIPTION
9	2	110244	Bolt, 1/2-13 X 1.5 Shcs
10	2	110588	Nut, 1/2-13 Wiz Flange
11	2	110658	Washer, 1/2" Flat Standard
12	1	285850	Door, Assy, 5th Wheel

One piece rod with hardware to secure.

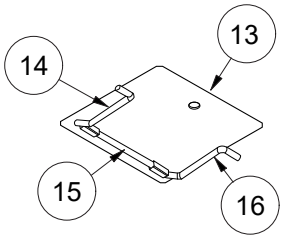

Old Gooseneck Well Door Kit **285252** (2022 & earlier)			
ITEM	QTY	PART #	DESCRIPTION
13	1	285233	Door, Wa Gooseneck Well
14	1	280151	Hinge, Straight Rod
15	1	280150	Hinge, Front Rod
16	1	280154	Hinge, Rear Rod

Three piece rod, hinge not welded.

SPIKES & SPIKE HOLDER

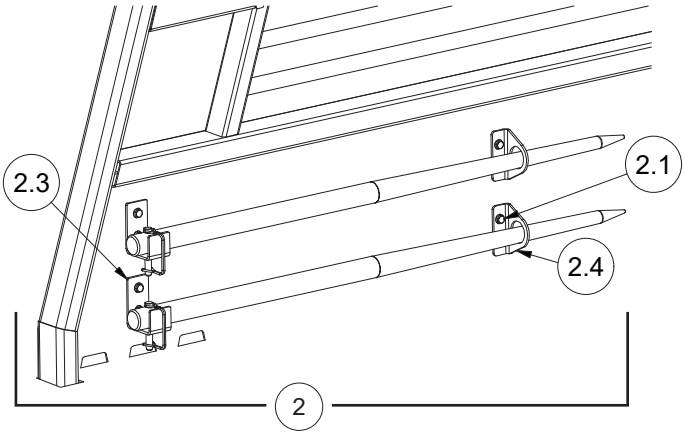

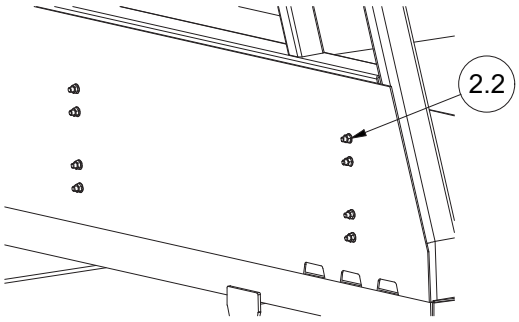

SUGGESTED MOUNTING LOCATIONS

DRILL HOLE ∅0.375-0.40

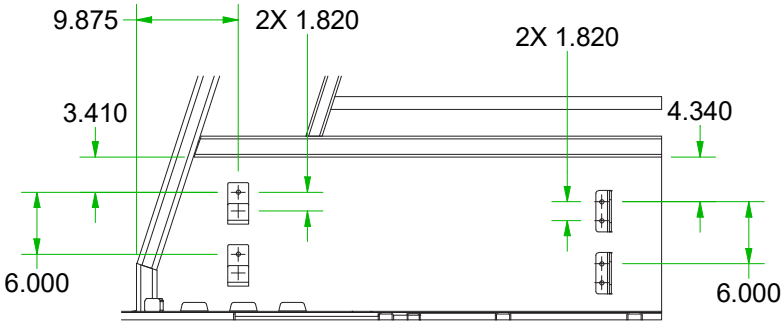

ARM BED SPIKES (PAIR)

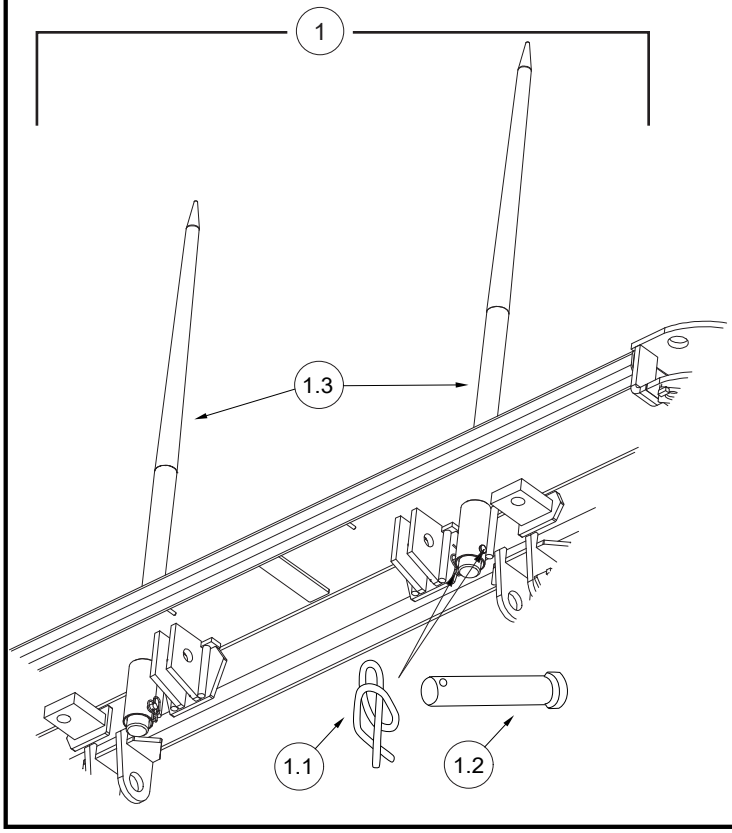

Parts List			
ITEM	QTY	PART #	DESCRIPTION
1	1	205326	Spikes (Pair, Arm Bed)
1.1	2	102122	Locking Cotter Ring 1”
1.2	2	111214	Pin, 1/2” Diameter
1.3	2	212045	Spike, Butler Arm Bed
2	1	205369	Spike Holder Kit
2.1	8	110440	Bolt, 3/8-16 X 1, Wiz Flange
2.2	8	110645	Nut, 3/8-16 Wiz Flange
2.3	2	281020	Bracket, Spike Holder
2.4	2	281062	Bracket, Spike Support

DECALS

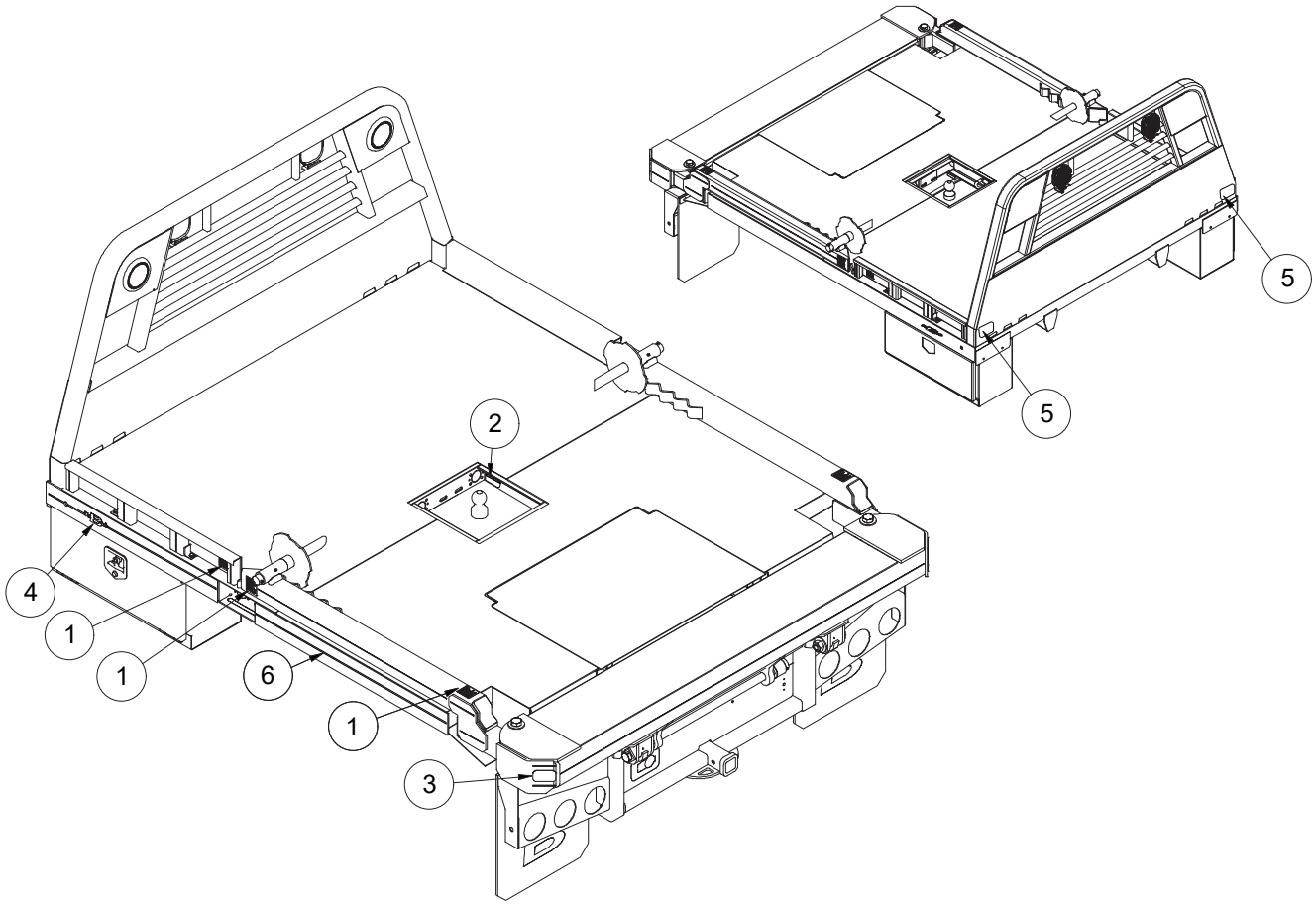

1

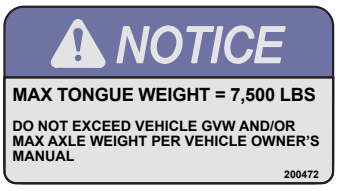

2

3

4

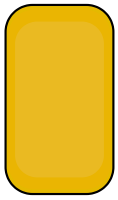

5

6

Parts List			
ITEM	QTY	PART #	DESCRIPTION
1	6	200144	Decal, Danger
2	1	200472	Decal, Gooseneck Tongue Weight
3	2	202138	Decal, Red Reflector 2 X 3.5
4	2	202140	Decal, Butler
5	2	202139	Decal, Amber Reflector 2 X 3.5
6	1	202148	Decal, Pinstripe, White 150' Roll

LIFT CYLINDER

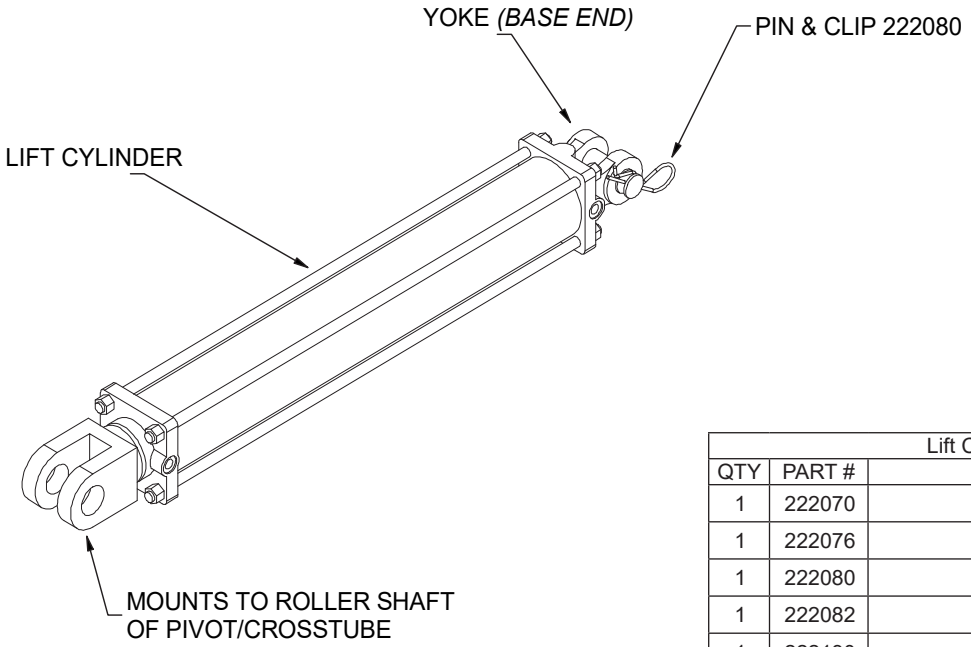

Lift Cylinder Parts List		
QTY	PART #	DESCRIPTION
1	222070	Lift Cylinder (1.25 x 3.0 x 20)
1	222076	Yoke 3.0 Kit
1	222080	Pin & Clip (1.0 x 3.125)
1	222082	Seal Kit 2.0 x 3.0
1	222130	Clevis, Rod End, Lift Cylinder

Butler Arm Manual

SQUEEZE CYLINDERS

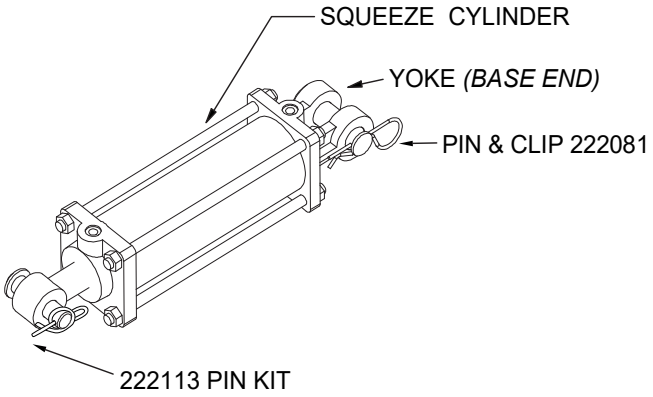

Squeeze Cylinder Parts List		
QTY	PART #	DESCRIPTION
1	222066	NEW 6” Squeeze DRV (1.125 x 2.5 x 6)
1	222067	NEW 6” Squeeze PASS (1.125 x 2.75 x 6)
1	222096	OLD 4” Squeeze DRV (1.125 x 2.5 x 4)
1	222097	OLD 4” Squeeze PASS (1.125 x 2.75 x 4)

Service Parts DRV Squeeze Cylinders (4” or 6”)		
QTY	PART #	DESCRIPTION
1	222078	Yoke Kit, 2.5
1	222081	Pin & Clip 1.0 x 2.75
1	222084	Seal Kit 1.125 x 2.5
1	222113	Pin Kit Ø.75 x 2.5
	102143	Locking Cotter Ring, 3/4”

Service Parts PASS Squeeze Cylinders (4” or 6”)		
QTY	PART #	DESCRIPTION
1	222079	Yoke Kit, 2.75
1	222081	Pin & Clip 1.0 x 2.75
1	222085	Seal Kit 1.125 x 2.75
1	222113	Pin Kit Ø.75 x 2.5
	102143	Locking Cotter Ring, 3/4”

HOSE CHART (NO COUPLERS)

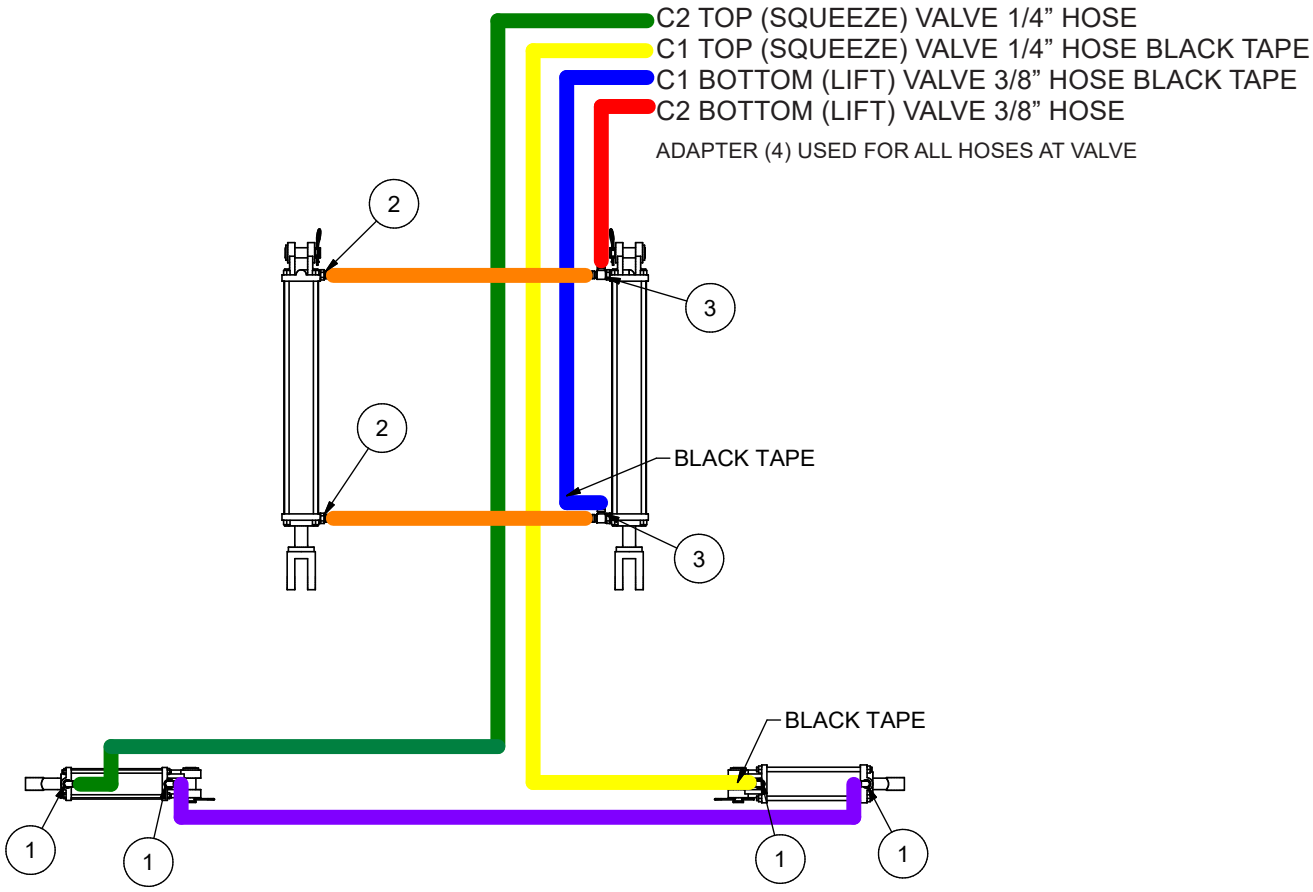

FITTING TABLE			
ITEM	QTY	PART#	DESCRIPTION
1	4	120222	Adapter 6mj-6mb90
2	2	120277	Adapter 8mj-8mb
3	2	120512	Adapter 8mj-8mb-8mj
4	4	120319	Adapter 6mj-6mb

HOSE TABLE						
BED	HOSE 1 (RED)	HOSE 2 (BLUE)	HOSE 3 (GREEN)	HOSE 4 (YELLOW)	HOSE 5 (ORANGE)	HOSE 6 (PURPLE)
A84X84	220766	220767	220765	220764	220751	220754
A84X101	220753	220752	220756	220755	220751	220754
A84X108	220782	220783	220769	220781	220751	220754
A84X113	220786	220787	220785	220784	220751	220754
A90X108	220801	220802	220800	220799	220751	220768
A90X113	220771	220772	220770	220769	220751	220768
A90X137	220790	220791	220789	220788	220751	220759
A94X101	220762	220763	220761	220760	220751	220759
A94X108	220775	220776	220774	220773	220751	220759
A94X113	220771	220772	220770	220769	220751	220759
A94X132	220776	220798	220797	220796	220751	220759
A94X137	220790	220791	220789	220788	220751	220759
A96X84	220794	220795	220793	220792	220751	220759
A96X101	220779	220780	220778	220777	220751	220759
A96X108	220775	220776	220774	220773	220751	220759
A96X113	220771	220772	220770	220769	220751	220759
A96X132	220776	220798	220797	220796	220751	220759
A96X137	220790	220791	220789	220788	220751	220759

HOSE CHART (WITH COUPLERS)

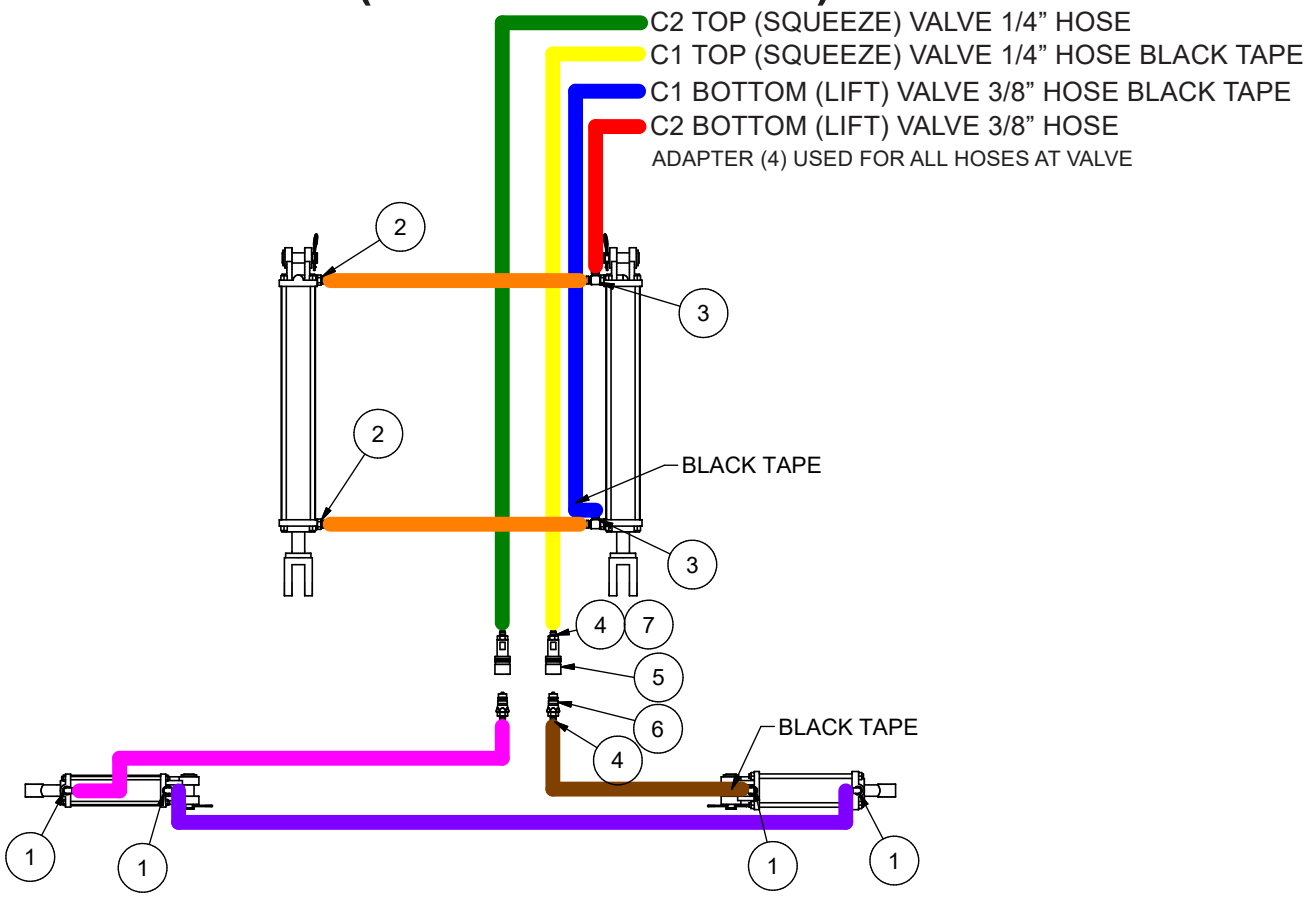

- When using couplers care must be taken to not mix oils with attachments. ISO 46 is recommended.
- Pump should only be ran continuously 2 minutes out of every 10 minutes.
- Do not use with large hydraulic cylinders where the differential volume between the rod end and the base end is larger than 0.5 Gallons. The pump reservoir capacity is only 0.87 Gallons and using couplers with large cylinders could lead to pump starvation.

FITTING TABLE			
ITEM	QTY	PART#	DESCRIPTION
1	4	120222	Adapter 6mj-6mb90
2	2	120277	Adapter 8mj-8mb
3	2	120512	Adapter 8mj-8mb-8mj
4	8	120319	Adapter 6mj-6mb
5	2	120581	Coupler, Female Orb
6	2	120582	Coupler, Male Orb
7	2	120239	Adapter 6mj-8mb (A94x113)
	2	102131	Clamps, Hose Positioning
	2	112127	Dust Caps

HOSE TABLE								
BED	HOSE 1 (RED)	HOSE 2 (BLUE)	HOSE 3 (GREEN)	HOSE 4 (PINK)	HOSE 5 (YELLOW)	HOSE 6 (BROWN)	HOSE 7 (ORANGE)	HOSE 8 (PURPLE)
A84X101	220753	220752	220805	220807	220804	220806	220751	220754
A94X101	220762	220763	220805	220807	220804	220806	220751	220759
A94X108	220775	220776	220805	220807	220804	220806	220751	220759
A94X113	220790	220791	220822	220754	220823	220807	220751	220759
A94X132	220776	220798	220805	220807	220804	220806	220751	220759
A94X137	220790	220791	220822	220754	220823	220807	220751	220759
A96X84	220794	220795	220805	220807	220804	220806	220751	220759
A96X101	220779	220780	220805	220807	220804	220806	220751	220759

LIGHTS

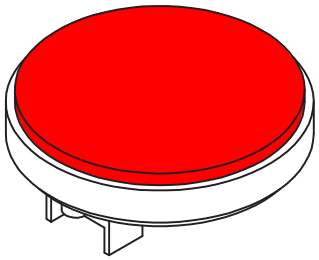

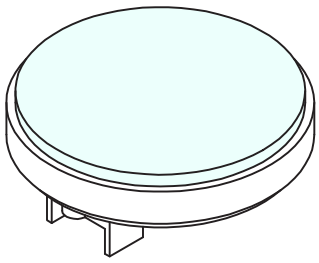

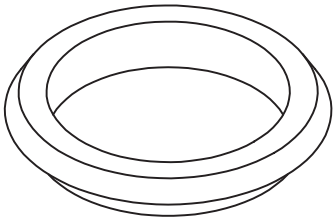

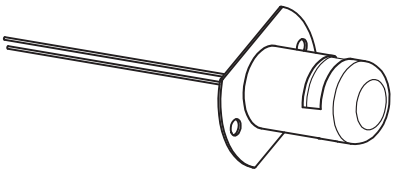

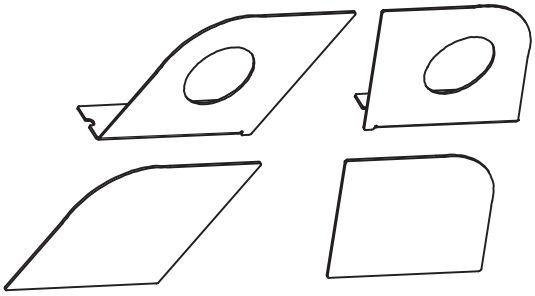

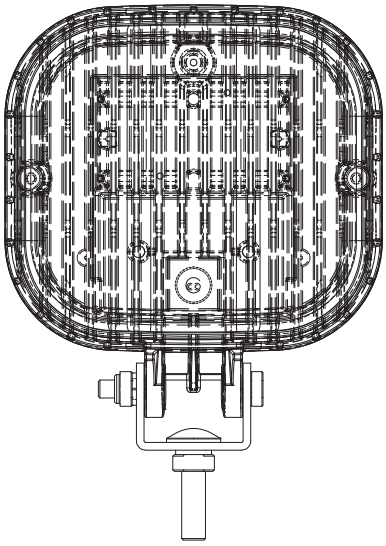

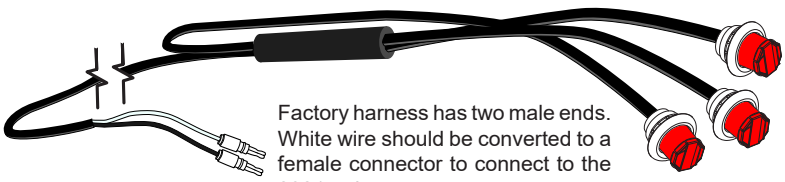

Factory harness has two male ends. White wire should be converted to a female connector to connect to the 232157 harness.

LIGHTS			
ITEM	QTY	PART#	DESCRIPTION
1	6	232144	Light, LED 4" Red
2	2	232145	Light, LED 4" Clear
3	2	232147	Light, LED 3/4" Red
4	2	232148	Light, LED 3/4" Amber
5	1	232188	Light, Tag Clear
6	8	232146	Grommet, Light
7	2	232167	Light, Work
8	1	232170	Light Harness, LED 3/4" Red 3pc
9	1	225034	Kit, STT Light Brackets

ELECTRICAL HARNESSES

250A FUSE: See Arm Bed Completing Kit pg. 29

***GOOSENECK POWER:** HII does not supply the cordage for powering a goosneck trailer. It is the owner's repsonsibility to ensure their power cable is free from binding, stretching or pinching.

***REAR CAMERA:** HII does not engineer wiring nor harnesses for the camera. It is the installers' responsibility to trace the OEM cable to re-attach.

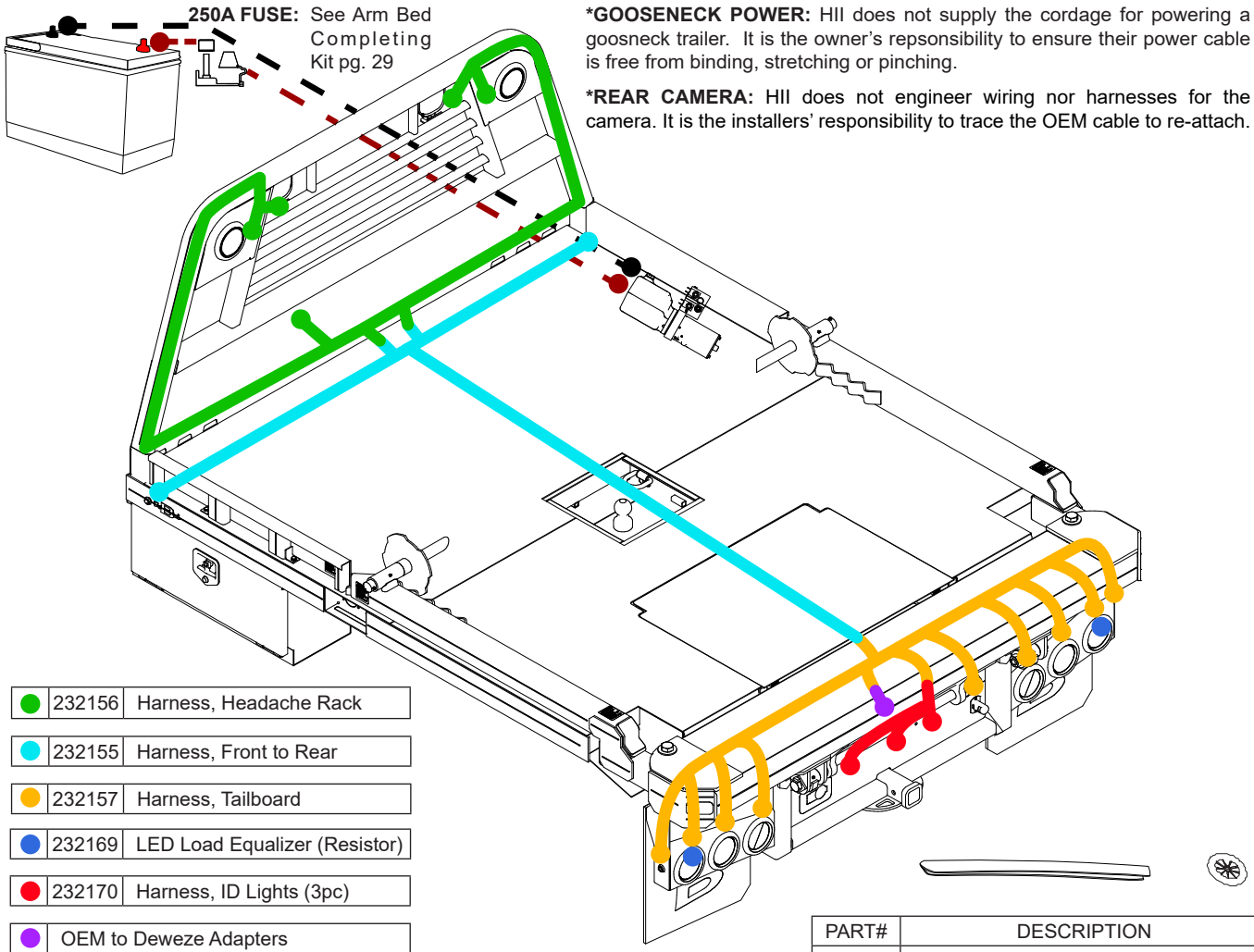

●	232156	Harness, Headache Rack
●	232155	Harness, Front to Rear
●	232157	Harness, Tailboard
●	232169	LED Load Equalizer (Resistor)
●	232170	Harness, ID Lights (3pc)
●		OEM to Deweze Adapters
●●		E/H Cables (see E/H section)

PART#	DESCRIPTION
112084	Edge Molding
112125	Grommet, Nylon 1¼

●● EH Battery & Ground 2ga cable

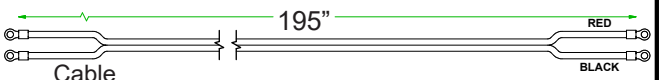

●● Cable 233007

Factory harness has two male ends. White wire should be converted to a female connector to connect to the 232157 harness.

● Harness 232170

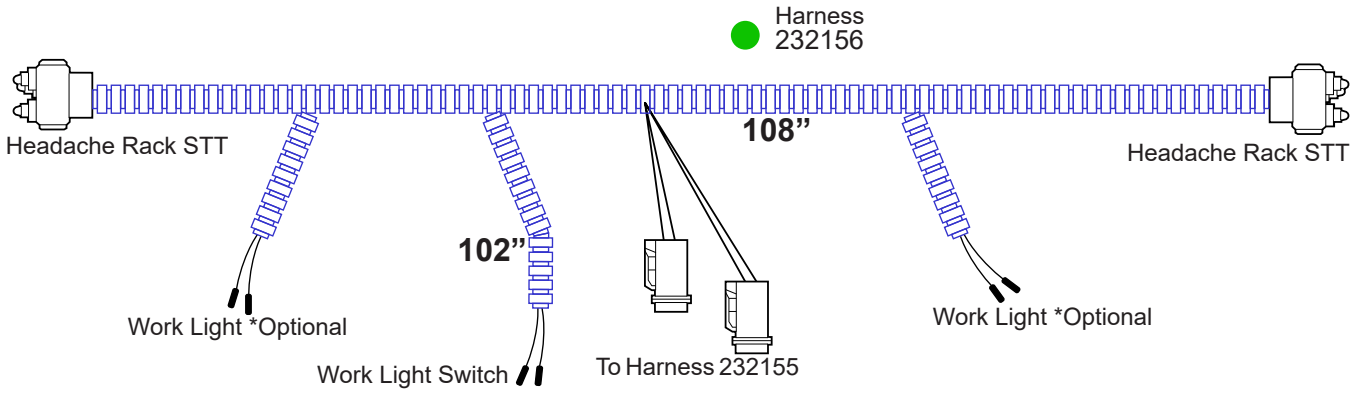
Harness
232156
Headache Rack STT
108”
Headache Rack STT
102”
Work Light *Optional
Work Light Switch
To Harness 232155
Work Light *Optional

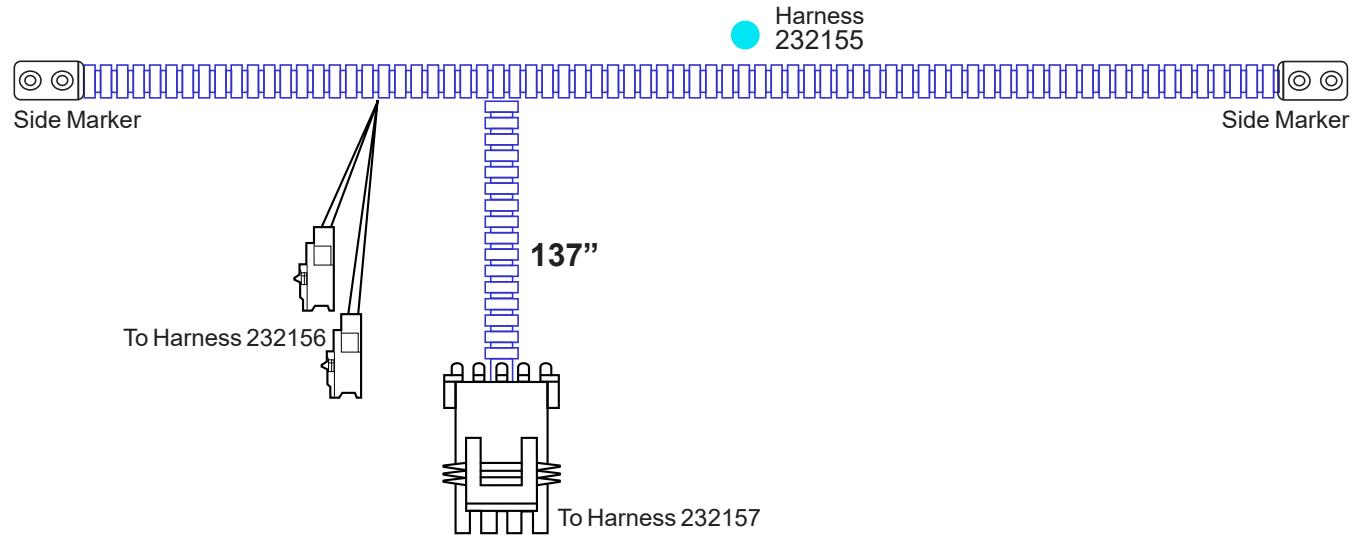
Harness
232155
Side Marker
Side Marker
137”
To Harness 232156
To Harness 232157

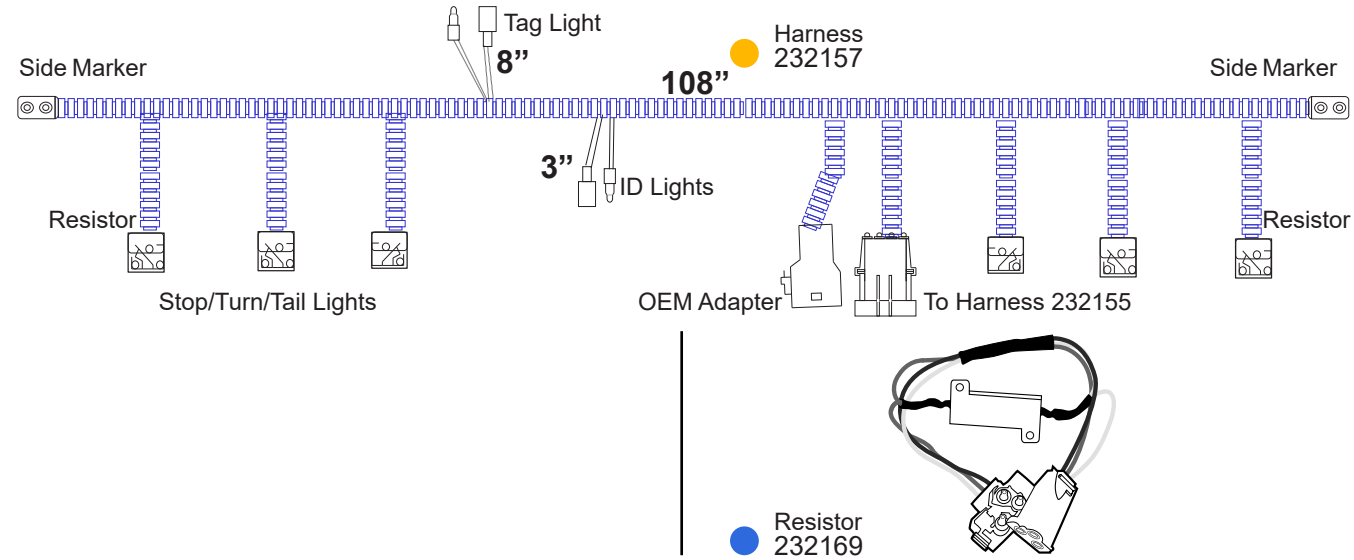
Tag Light
8”
Harness
232157
Side Marker
108”
Side Marker
3”
ID Lights
Resistor
Resistor
Stop/Turn/Tail Lights
OEM Adapter
To Harness 232155
Resistor
232169

OEM TO BUTLER ADAPTERS

PART#		DESCRIPTION	MAKE	TYPE	START YR	END YR
232161	FORD	Harness Adapter, FD CC	Ford	CC	1999	
232176		Harness Adapter, FD Box Delete, 2008-10	Ford	BTO	2008	2010
232160		Harness Adapter, FD Box Delete, 2011-16	Ford	BTO	2011	2016
232177		Harness Adapter, FD Box Delete, 2017-19	Ford	BTO	2017	2019
232185		Harness Adapter, FD Box Delete, 2020-22	Ford	BTO	2020	2022
232192		BLIS Add On for **232185** (Cut purple & red wires from 20 pin, splice into 232192)	Ford	BLIS	2020	2022
232234		Harness Adapter, FD Box Delete W/BLIS 23+	Ford	BTO	2023	
232174	CHEVY	Harness Adapter, GM 02-14 w/3rd Brake	GM	ALL	2002	2014
232163		Harness Adapter, GM 02-14 No 3rd Brake	GM	ALL	2002	2014
232158		Harness Adapter, GM 2015 ONLY	GM	ALL	2015	2015
232159		Harness Adapter, GM 2016-2019	GM	ALL	2016	2019
232179		Harness Adapter, 2019 MD Dty 4500-6500	GM	ALL	2019	
232187		Harness Adapter, GM CC 2020+	GM	CC	2020	
232178		Harness Adapter, 2020 GM 2500-3500	GM	ALL	2020	
232238		Harness Adapter, GM BTO	GM	BTO	2024	
232164	DODGE	Harness Adapter, Ram CC	Dodge	CC	1999	
232193		Harness Adapter, Ram Box Delete (STD)	Dodge	BTO	2019	2026
232233		Add to **232193** Harness Adapter, Ram Box Delete (LED)	Dodge	BTO	2019	2026
232248		Harness Adapter, Ram Box Delete (STD)	Dodge	BTO	2026	
232249		Add to **232248** Harness Adapter, Ram Box Delete (LED)	Dodge	BTO	2026	
232162		Harness Adapter, Generic	ALL	ALL	1999	

DODGE

Deweze DOES NOT provide a solution for FAST FLASHING lights. Customers can source LOAD EQUALIZERS independantly.

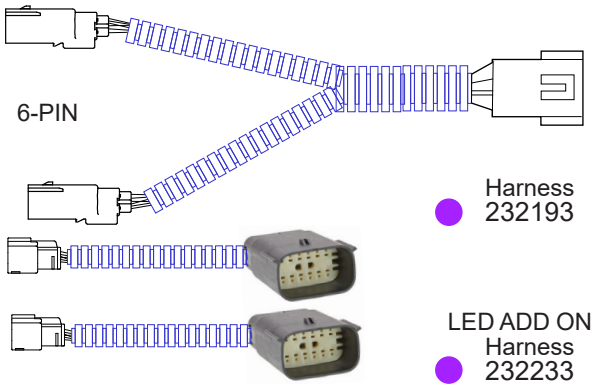

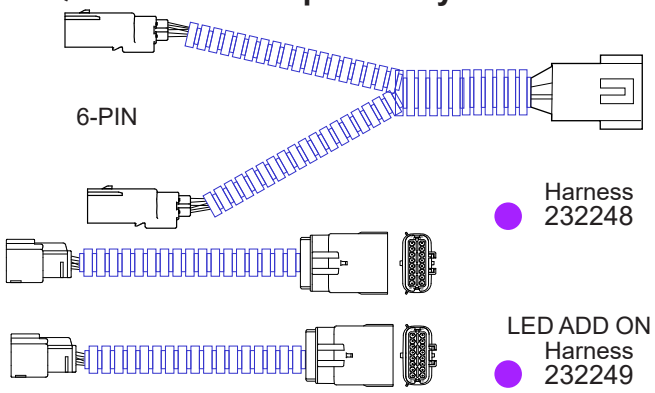

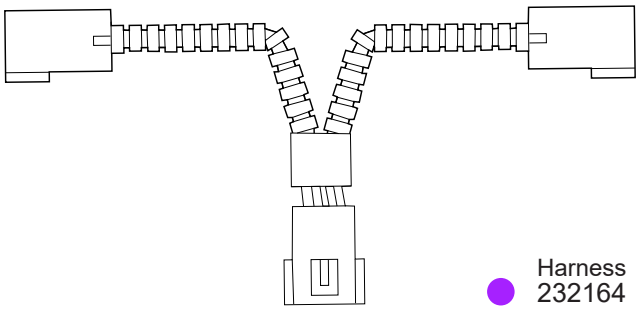

GENERIC (BLUNT CUT)

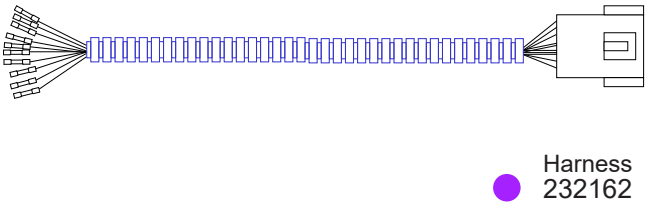

FORD

- OEM to Deweze Adapters

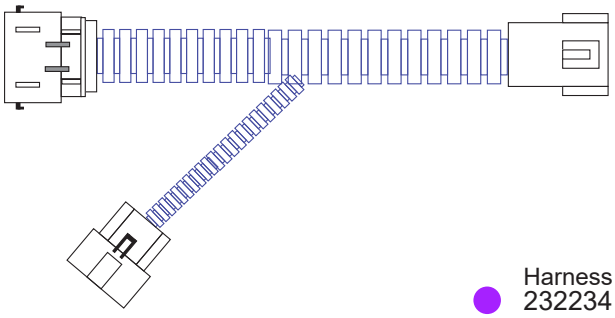

- Harness 232234

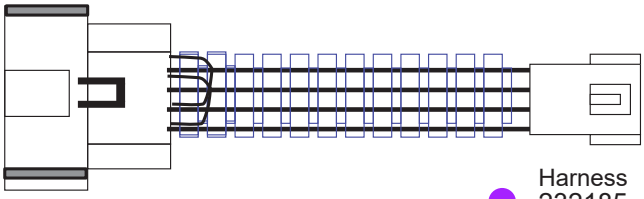

- Harness 232185 232177 232160

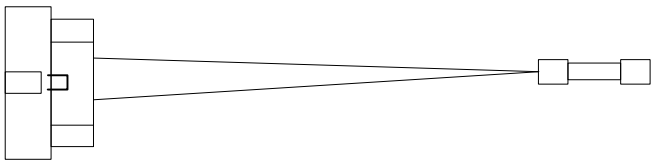

- Harness 232192

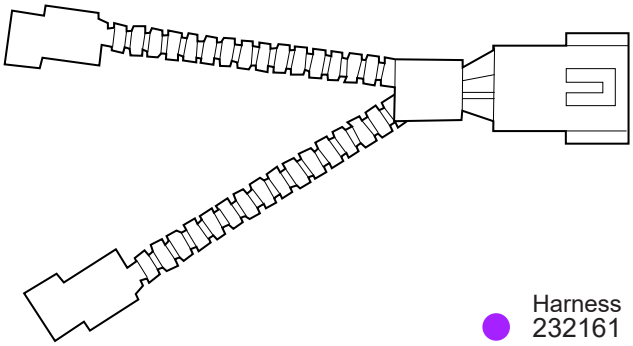

- Harness 232161

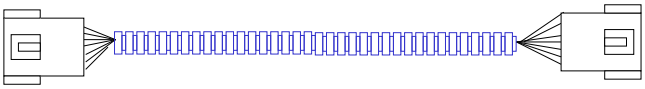

- Harness 232176

CHEVY

- OEM to Deweze Adapters

Purple wires only for fast flashing issue. See pg. 37

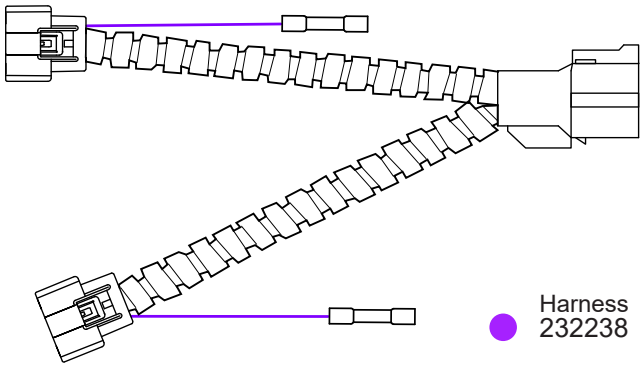

- Harness 232238

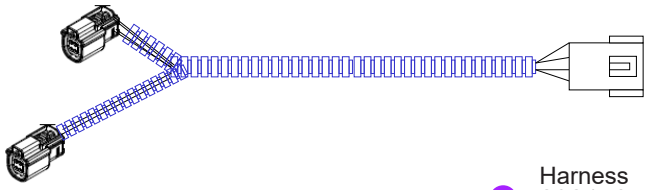

- Harness 232178 232159 232187

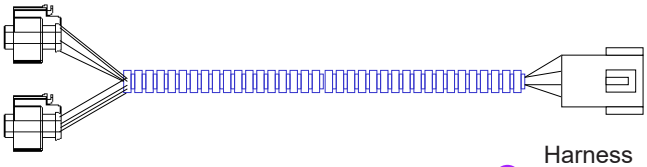

- Harness 232158

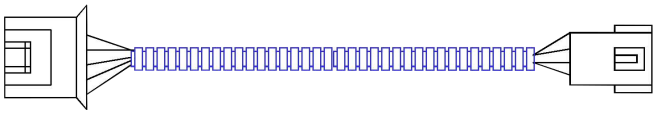

- Harness 232174 232163

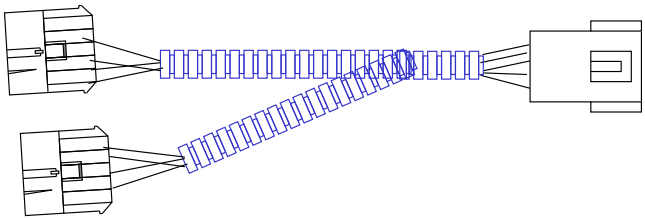

- Harness 232179

ARM BED COMPLETING KIT

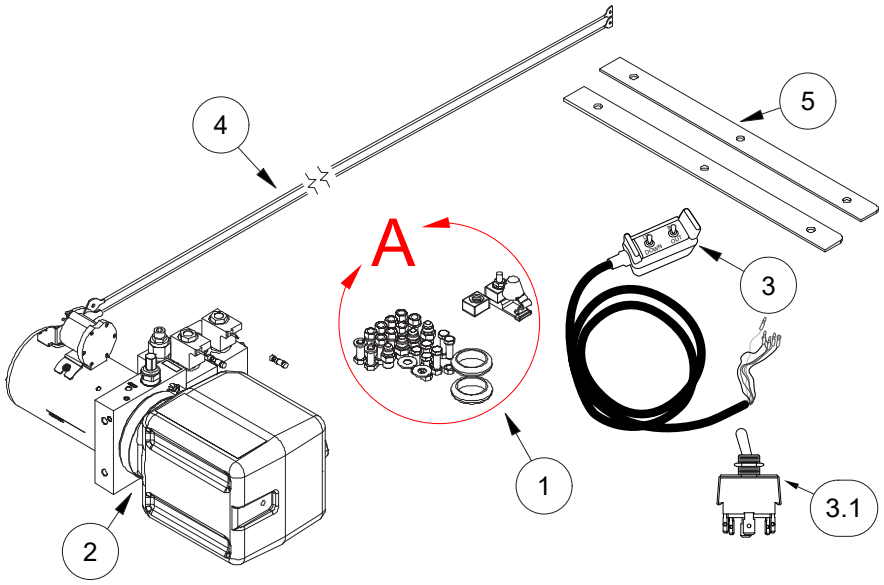

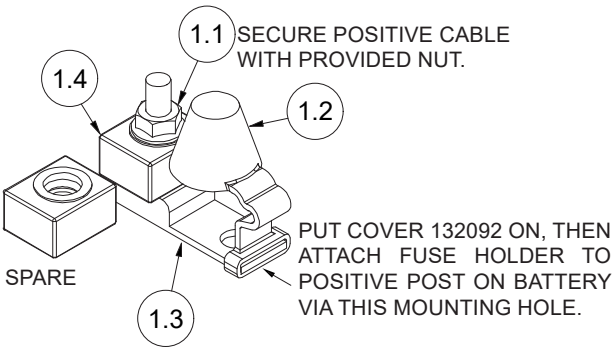

DETAIL A

HARDWARE KIT: 205410

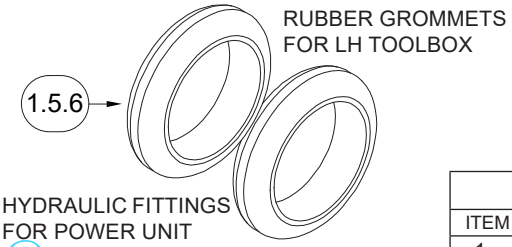

BOLT KIT: 205160

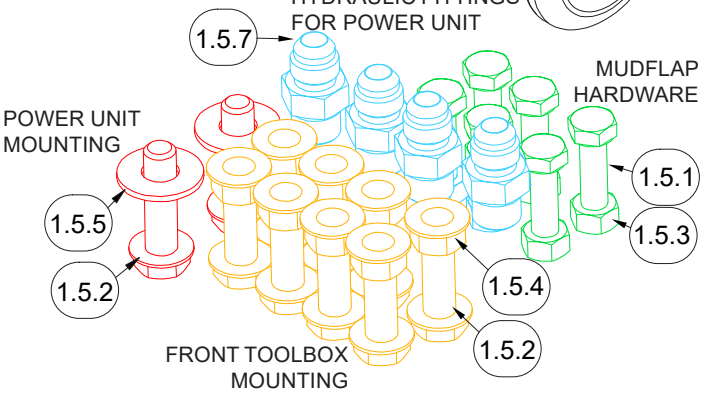

Parts List **KIT: 205250**

ITEM	QTY	PART #	DESCRIPTION
1	1	205410	Kit, Hardware (Arm Bed)
1.1	1	110141	Nut, M8 X 1.25 Wizflange
1.2	1	132092	Fuse Cover, Buss Cfcover-1r
1.3	1	132093	Fuse Holder, Buss Cfbar1-M8xsp
1.4	2	132180	Fuse 250 Amp, Buss Mrbf-250
1.5	1	205160	Kit, Bolt (Arm Bed)
1.5.1	6	110423	Bolt, 5/16-18 X 1.0
1.5.2	10	110440	Bolt, 3/8-16 X 1, Wiz Flange
1.5.3	6	110608	Nut, 5/16-18
1.5.4	8	110645	Nut, 3/8-16 Wiz Flange
1.5.5	2	110656	Washer, 3/8" Flat Special
1.5.6	2	112123	Grommet, Rubber 1 1/2 X 1/2 Round
1.5.7	4	120319	Adapter, 6mj-6mb
2	1	222074	Assembly, Power Unit (High/Arm Bed)
3	1	232150	Hand Control, AB, Two Switch
3.1	1	232171	Switch, AB Hand Control
4	1	233007	Kit, Power And Ground Cables, Long
5	2	281265	Bracket, Mudflap, Painted

CONTROLS: CORDED & WIRELESS

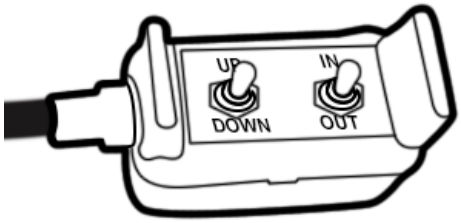

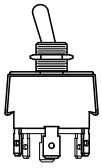

CORDED REMOTE		
QTY	PART #	DESCRIPTION
1	232150	Wired, Hand Control Two Switch
2	232171	Switch, AB Hand Control

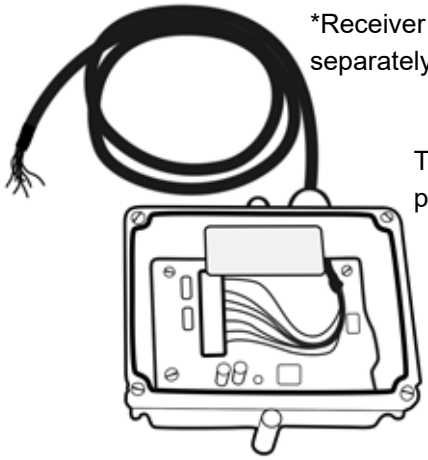

*Receiver NOT SOLD separately. Must buy kit.

Transmitter can be purchased individually.

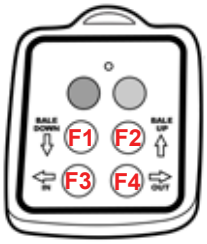

RECEIVER **TRANSMITTER**

WIRELESS REMOTE		
QTY	PART #	DESCRIPTION
1	233008	*RECEIVER/TRANSMITTER
1	232166	Transmitter
1	233016	Receiver/Transmitter Assy (new installs)

WIRELESS KIT (FIRST TIME INSTALL) **KIT: 233016**		
QTY	PART #	DESCRIPTION
1	233008	Transmitter & Receiver, 4 Function Lodar
1	233015	Kit, Wireless Hardware (Arm Bed)
1	110308	Bolt, 5/16-18 X 0.5, Gr8
2	110344	Screw, 8-32x1.5 Pan Head Phps
2	110345	Nut, 8-32 Lock Nylon
1	132001	Fuse Holder, Atc, 14 Ga., Mini
2	132147	Terminal, Butt Connect 16-14, Heat Shink
4	132165	Terminal, Female Bullet, 16-14, Nylon
4	132170	Terminal, Male Bullet, 16-14, Nylon
1	132178	Fuse, Mini 7.5 Amp

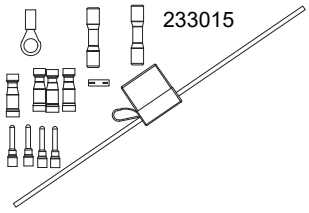

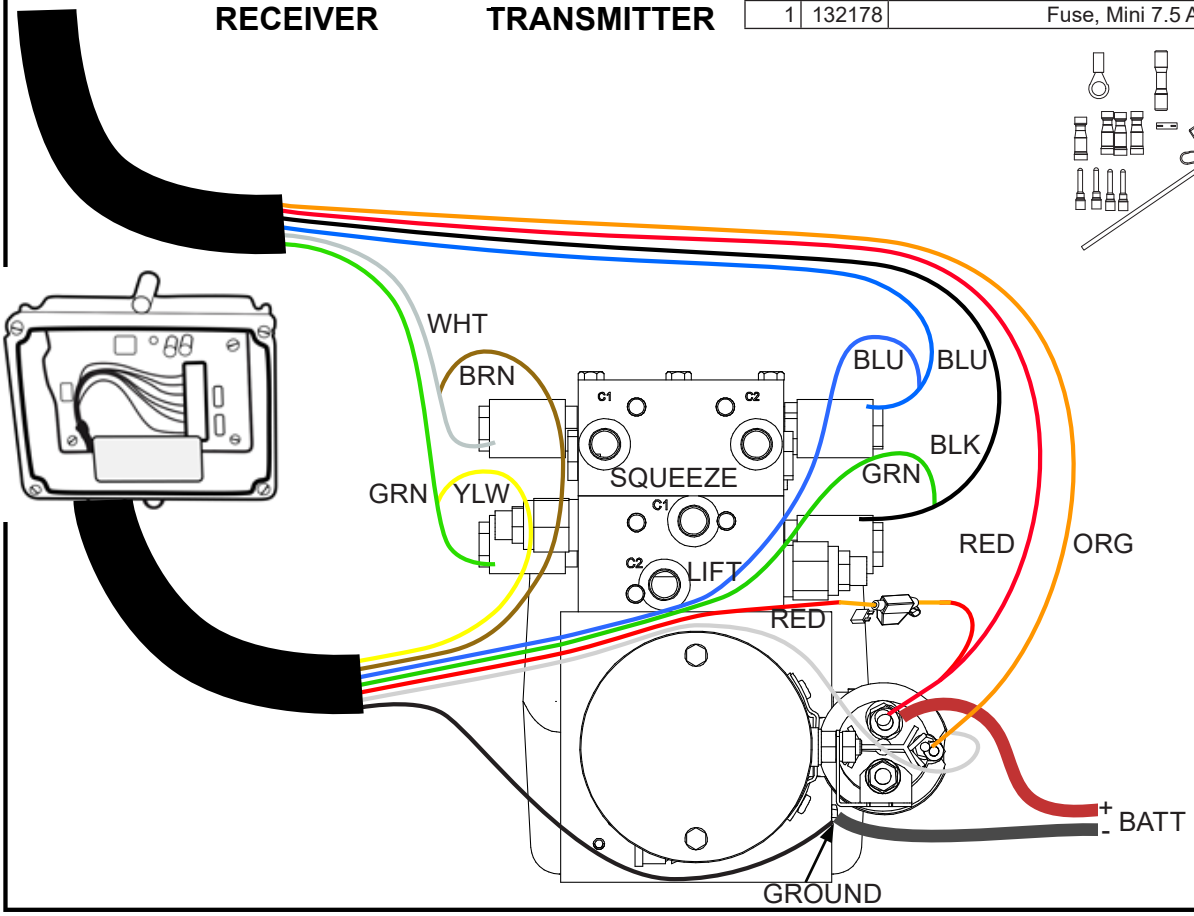

E/H UNIT

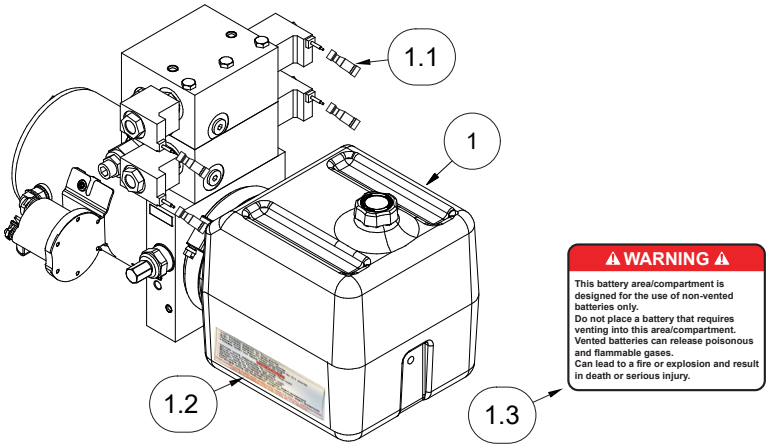

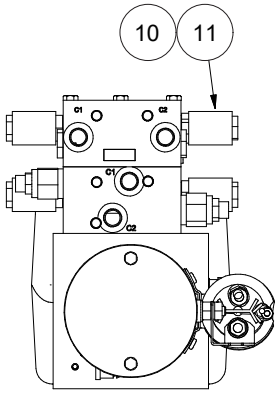

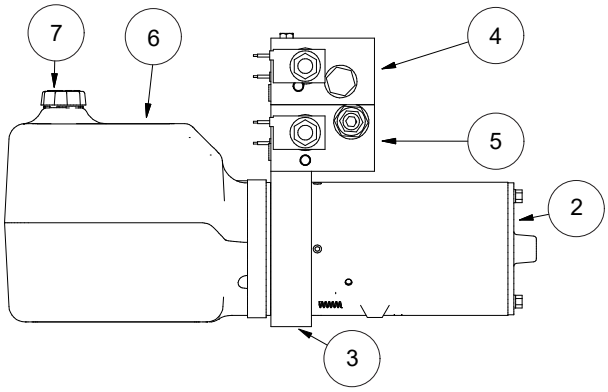

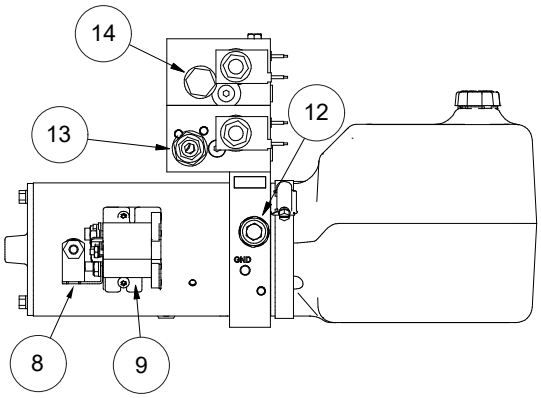

Parts List			KIT: 222074
ITEM	QTY	PART #	DESCRIPTION
1	1	222074	E/H Unit, Bucher 3530-0179
1.1	4	132165	Terminal, Female Bullet, 16-14, Nylon
1.2	1	202141	Decal, 2x6 Arm Bed Remote Instructions
1.3	1	202180	Decal, Non-Vented Battery Warning.
2	1	222072	Motor, Electric Ab 12v
3	1	222094	Pump, Hydraulic Ab
4	1	222090	Valve, Squeeze Ab
5	1	222091	Valve, Lift Ab
6	1	212034	Tank, Hydraulic Bucher
7	1	212044	Cap, Hydraulic Tank Bucher
8	1	232180	Strap, Solenoid Connecting
9	1	232089	Solenoid, 3 Pole, Heavy Duty
10	4	222088	Valve, Cartridge Ab
11	4	212033	Valve, Coil Butler
12	1	222104	Valve, Ab Relief
13	1	222105	Valve, Ab Counterbalance
14	1	222089	Check Valve, Ab And Sb

E/H ELECTRICAL SCHEMATIC

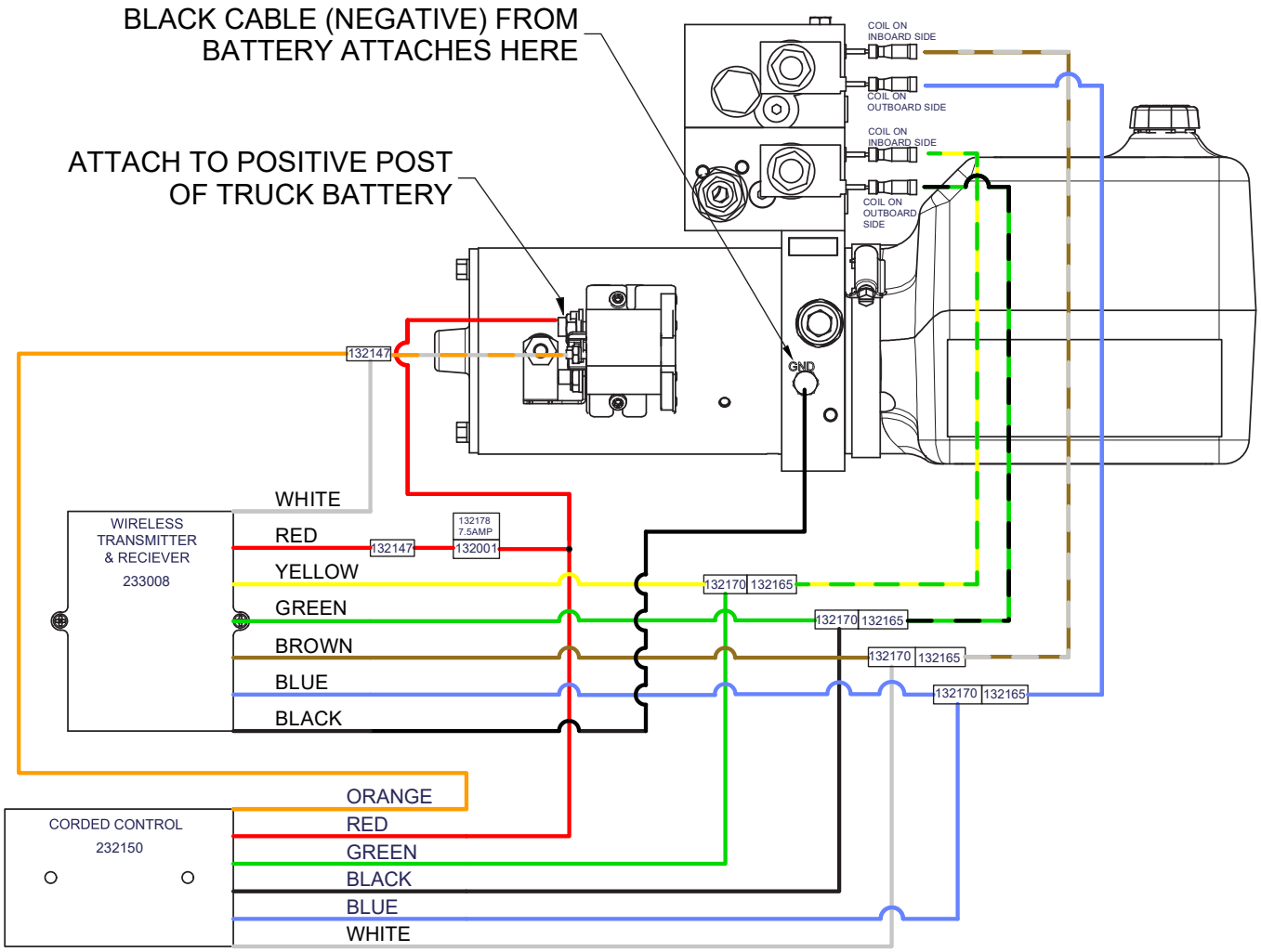

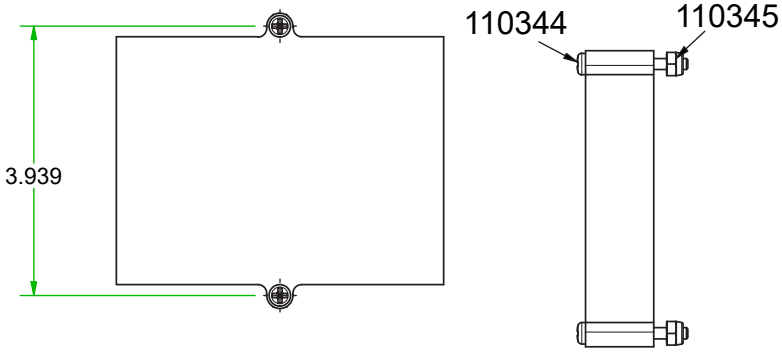

- MOUNT TRANSMITTER AS FAR AS FEASIBLE IN UPPER RH CORNER OF PASSENGER SIDE TOOLBOX.
- DRILL Ø 0.20 HOLES PER NOTED DIMENSIONS
- USE HARDWARE KIT 233015 TO MOUNT

TOOLBOXES

FRONT TOOLBOX			REAR TOOLBOX		
SIZE	LH PART #	RH PART #	SIZE	LH PART #	RH PART #
18”	282004	282023	20”	282017	282018
20”	282005	282006	24”	282019	282020
30”	282001	282002			
36”	282008	282022			

QTY	PART #	DESCRIPTION
Chart	102030	Toolbox Seal (sold by foot)
1	102053	Plug, Button 1.00
1	282011	Toolbox Latch
8	110440	Bolt, 3/8-16 x 1 GR5 Zn
8	110676	Washer 3/8 Lock Zn
8	110645	Nut, 3/8-16 GR5 Zn
2	112123	Grommet, Ruber 1 1/2 ID

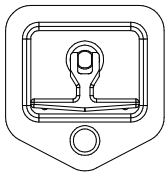

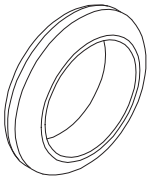

TBX Size	Seal (feet)
18	5
20	5.5
24	6
30	7
36	8

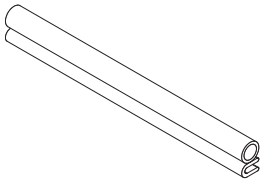

REAR TOOLBOXES

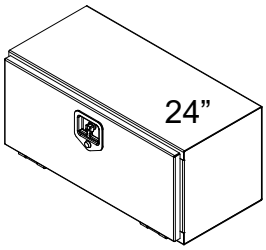

24 x 14 x 11”

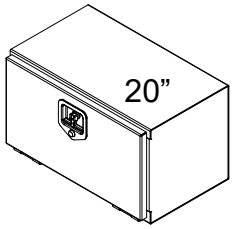

20 x 14 x 11”

FRONT TOOLBOXES

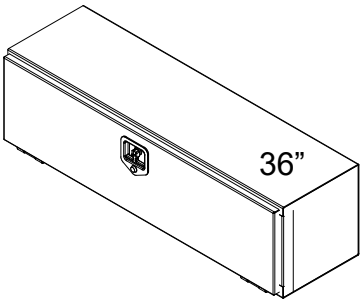

36 x 14 x 11”

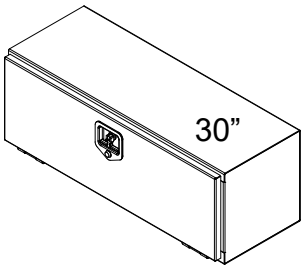

30 x 14 x 11”

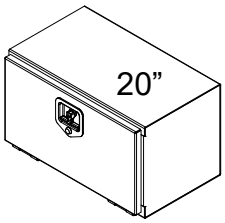

20 x 14 x 11”

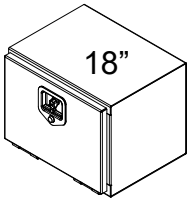

18 x 14 x 11”

282003

DUAL LID

72 x 12.8 x 16”

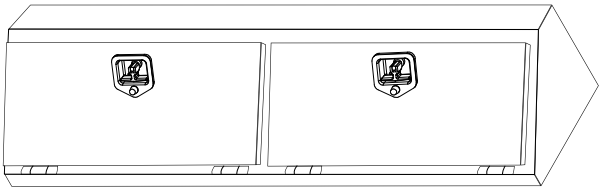

282021

SINGLE LID

79 x 21.5 x 17.6”

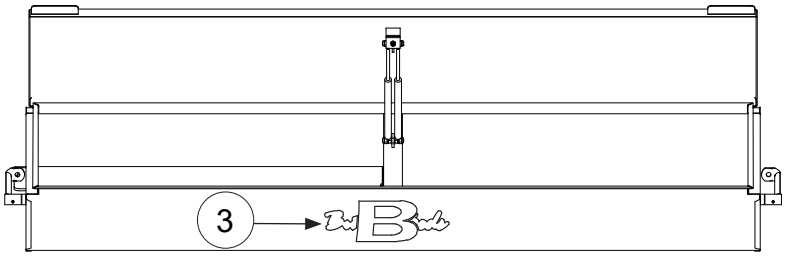

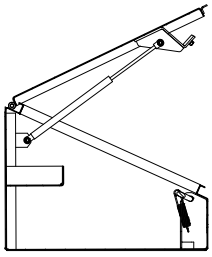

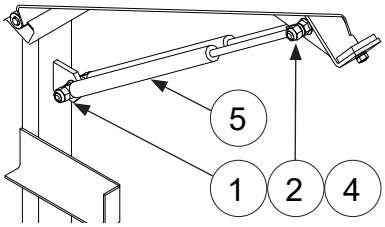

282021 PARTS LIST			
ITEM	QTY	PART #	DESCRIPTION
1	4	110618	Nut, 2/8-16 Lock Nylon Insert
2	4	110645	Nut, 3/8-16 Wiz Flange
3	1	202150	Butler Beds Decal, 9 X 2.97
4	2	210908	Bolt, Shock Mount
5	2	500078	Shock, Gas Filled

MUDFLAPS

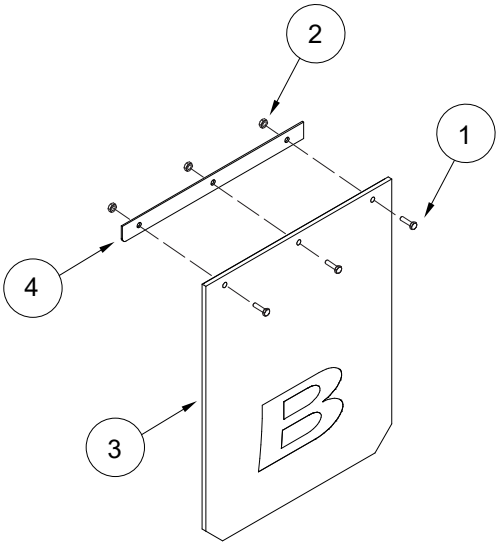

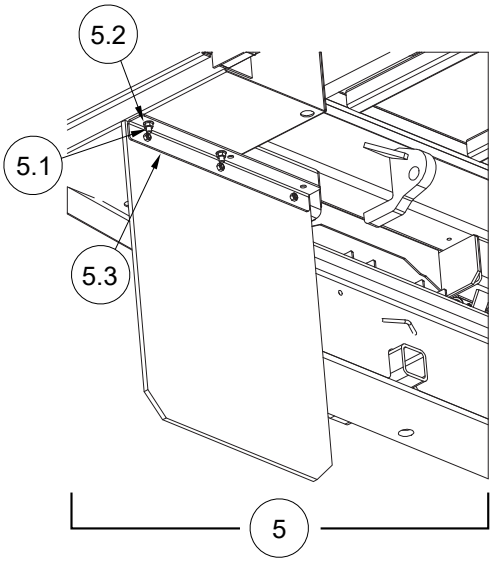

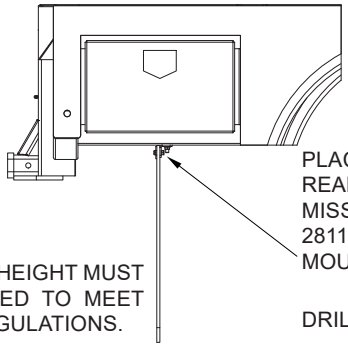

PLACE MUDFLAP ON BOTTOM SIDE OF REAR BOX. PLACE APPROPRIATELY TO MISS EXHAUST SYSTEM. USE BRACKET 281125 AS A TEMPLATE FOR DRILLING MOUNTING HOLES.

DRILL HOLES Ø0.438 (7/16 INCH)

MUDFLAP HEIGHT MUST BE TRIMMED TO MEET LOCAL REGULATIONS.

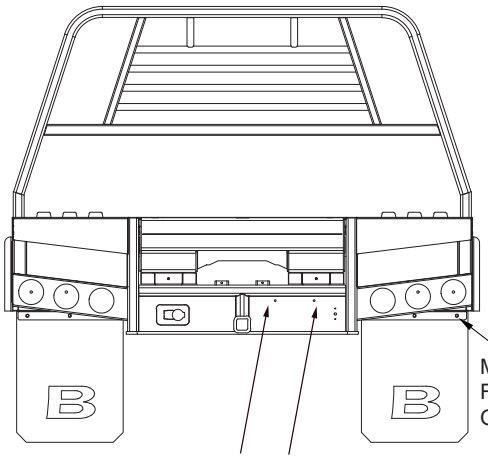

MOUNT MUDFLAP FLUSH WITH EDGE OF TOOLBOX

LICENSE PLATE HOLES ARE 3/8” NON-THREADED.

PARTS LIST			
ITEM	QTY	PART #	DESCRIPTION
1	6	110423	Bolt, 5/16-18 X 1 Gr5 Zinc
2	6	110608	Nut, 5/16-18 Gr5 Zinc
3	2	202137	Mudflap, Butler, 24” (sold individually)
4	2	281265	Plate, Mudflap, 19 X 1.5, 3 Holes
5	1	205382	Kit, Mudflap Mount
5.1	4	110440	Bolt, 3/8-16 X 1, Wiz Flange
5.2	4	110645	Nut, 3/8-16 Wiz Flange
5.3	2	281125	Bracket, Mud Flap

BED MOUNTING KITS

PART#	DESCRIPTION	MAKE	TYPE	START	END
205162	Chevy General	GM	BD	1990	2010
205356	Chevy BD	GM	BD	2011	2019
205365	Chevy C&C	GM	C&C	1990	2010
205366	Chevy C&C	GM	C&C	2011	Current
205484	Chevy C&C, 45-6500 60" CA	GM	C&C	2019	Current
205485	Chevy C&C, 84" CA	GM	C&C	2011	Current
205490	Chevy C&C, 45-6500 84" CA	GM	C&C	2019	Current
205491	Chevy BD	GM	BD	2020	Current
205493	Chevy Short BD	GM	BD	2000	2010
205494	Chevy C&C, 84" CA	GM	C&C	2000	2010
205165	Dodge BD	Dodge	BD	1994	2002
205362	Dodge BD	Dodge	BD	2003	2013
205359	Dodge BD, 3500	Dodge	BD	2014	Current
205360	Dodge BD, 2500	Dodge	BD	2014	Current
205361	Dodge Short BD	Dodge	BD	2014	Current
205175	Dodge C&C	Dodge	C&C	2007	Current
205492	Dodge C&C, 84" CA	Dodge	C&C	2007	Current
205363	Ford Long Bed, BD	Ford	BD	1998	2016
205364	Ford Short Bed, BD	Ford	BD	1998	2016
205355	Ford BD	Ford	BD	2017	Current
205357	Ford C&C	Ford	C&C	1999	2016
205358	Ford C&C	Ford	C&C	2017	Current
205431	**Add-on** for **205358** with outboard DEF tank	Ford	C&C	2017	Current

REAR VIEW CAMERA MOUNTING KITS *

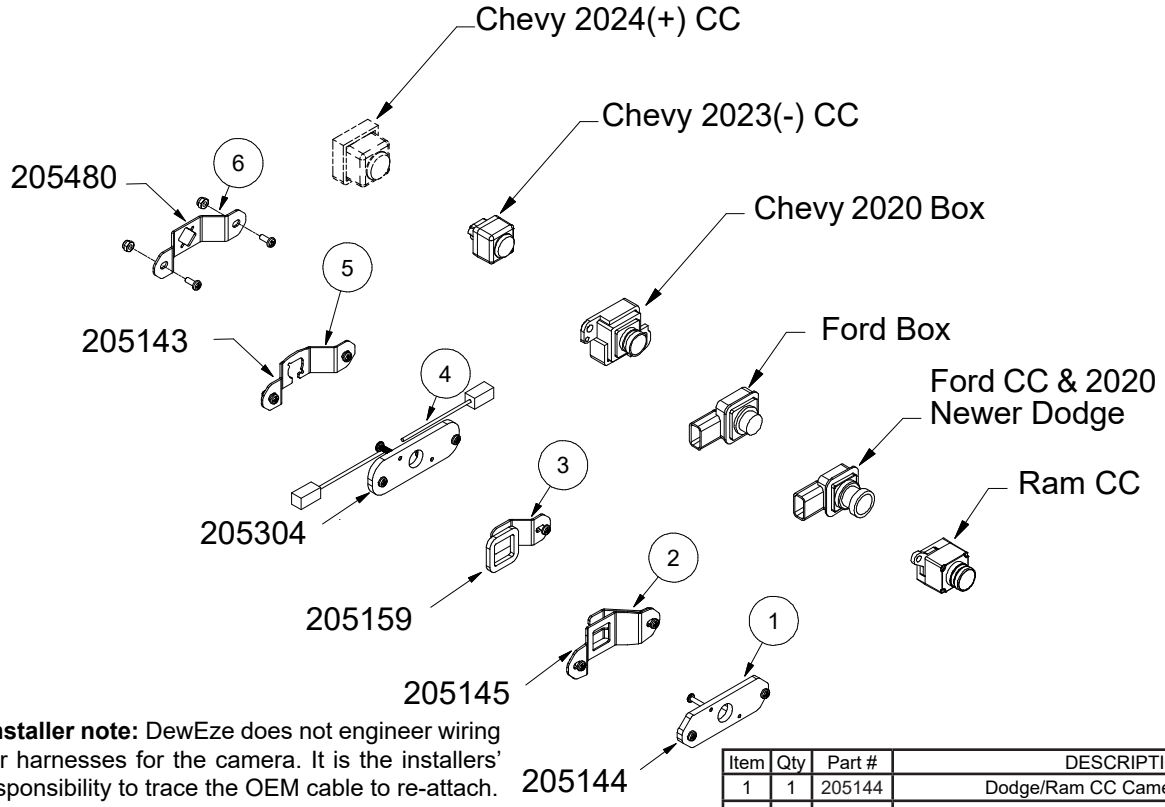

***Installer note:** DewEze does not engineer wiring nor harnesses for the camera. It is the installers' responsibility to trace the OEM cable to re-attach.

***Mount Disclaimer:** These mounting kits were designed for the most common mounting-to-camera. Manufacturers change camera styles & mountings even within the same year. Use best practices to modify if need be.

Item	Qty	Part #	DESCRIPTION
1	1	205144	Dodge/Ram CC Camera Mount Kit
2	1	205145	Ford Camera & Dodge 2020+ Mount Kit
3	1	205159	Ford Box Take-Off Camera Mount Kit
4	1	205304	Chevy/ GM 2020 Box Take-Off Camera Mount Kit
5	1	205143	Chevy/GM CC 2023- Camera Mount Kit
6	1	205480	Chevy/GM CC 2024+ Camera Mount Kit
7	1	261343	Camera Mount Weldment

BED LENGTHS FOR CAKE FEEDERS

(HEADACHE RACK TO GOOSENECK WELL)

Model Name	Type	Width	Length	Headache Rack to Front of Gooseneck Well Door
A84X84	arm	84	84	24
A84X101	arm	84	101	41
A84X108	arm	84	108	46.25
A84X113	arm	84	113	51.25
A90X108	arm	90	108	46.25
A90X113	arm	90	113	51.25
A90X137	arm	90	137	75.25
A94X84	arm	94	84	24
A94X101	arm	94	101	41
A94X108	arm	94	108	46.25
A94X113	arm	94	113	51.25
A94X132	arm	94	132	70.25
A94X137	arm	94	137	75.25
A96X84	arm	96	84	24
A96X101	arm	96	101	41
A96X108	arm	96	108	46.25
A96X113	arm	96	113	51.25
A96X132	arm	96	132	70.25
A96X137	arm	96	137	75.25
S80X86	spike	80	86	24
S80X102	spike	80	102	41
S80X110	spike	80	110	46.25
S80X115	spike	80	115	51.25
S84X86	spike	84	86	24
S84X102	spike	84	102	41
S84X110	spike	84	110	46.25
S84X115	spike	84	115	51.25
S90X110	spike	90	110	46.25
S90X115	spike	90	115	51.25
S90X139	spike	90	139	75.25
S94X86	spike	94	86	24
S94X102	spike	94	102	41
S94X110	spike	94	110	46.25
S94X115	spike	94	115	51.25
S94X134	spike	94	134	70.25
S94X139	spike	94	139	75.25
S96X86	spike	96	86	24
S96X102	spike	96	102	41
S96X110	spike	96	110	46.25
S96X115	spike	96	115	51.25
S96X134	spike	96	134	70.25
S96X139	spike	96	139	75.25
R80X86	regular	80	86	24
R80X102	regular	80	102	41
R80X110	regular	80	110	46.25
R80X115	regular	80	115	51.25
R84X86	regular	84	86	24
R84X102	regular	84	102	41
R84X110	regular	84	110	46.25
R84X115	regular	84	115	51.25
R90X110	regular	90	110	46.25
R90X115	regular	90	115	51.25
R90X139	regular	90	139	75.25
R94X86	regular	94	86	24
R94X102	regular	94	102	41
R94X110	regular	94	110	46.25
R94X115	regular	94	115	51.25
R94X134	regular	94	134	70.25
R94X139	regular	94	139	75.25
R96X86	regular	96	86	24
R96X102	regular	96	102	41
R96X110	regular	96	110	46.25
R96X115	regular	96	115	51.25
R96X134	regular	96	134	70.25
R96X139	regular	96	139	75.25

SERVICE TROUBLESHOOTING

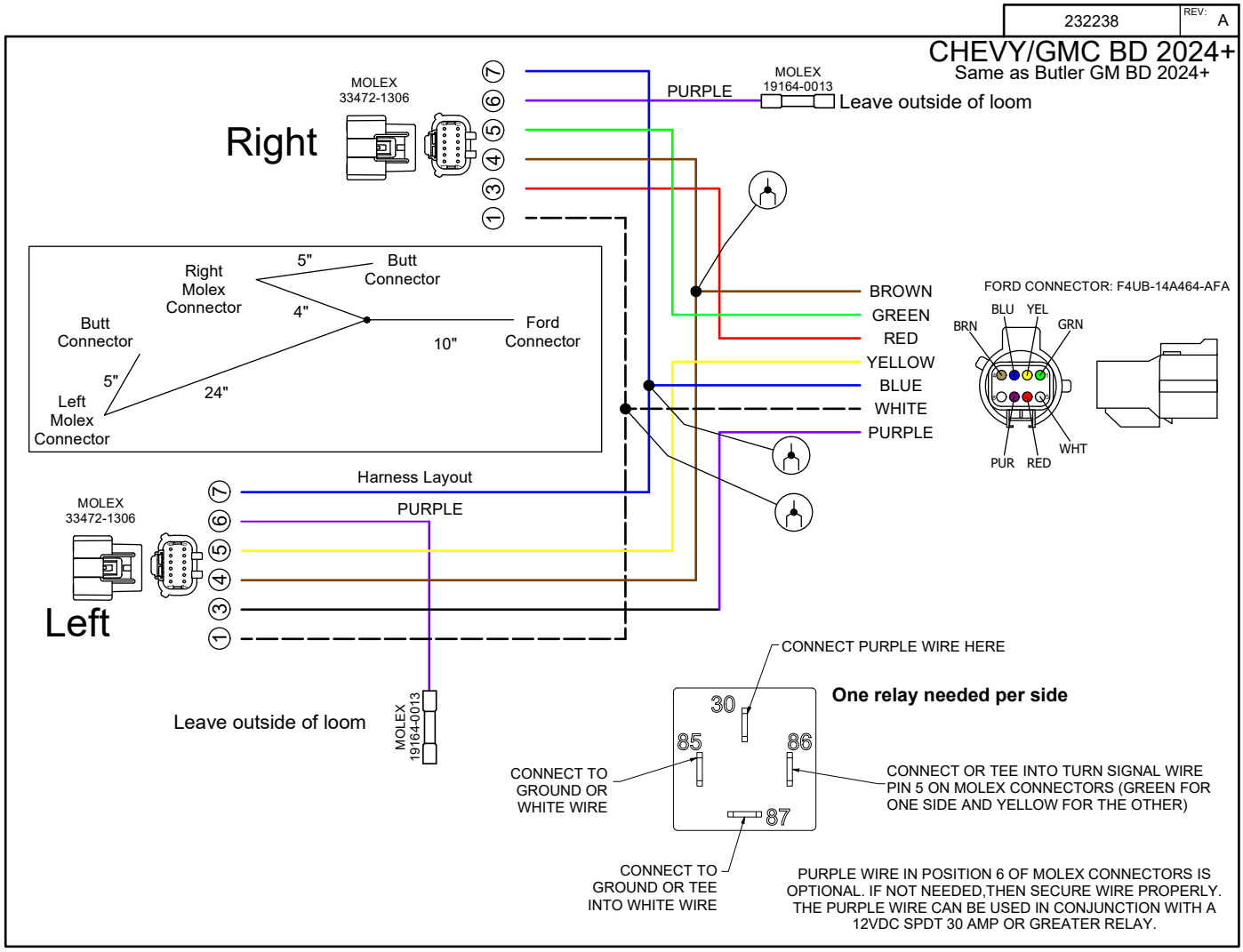

NOTES

Harper Industries, Inc.
151 E. Highway 160
Harper, KS 67058

Telephone: 620-896-7381
Toll-Free: 800-835-1042
Fax: 620-896-7129

Website: www.butlerbeds.com

E-mail: info@butlerbeds.com